# Angular contact thrust ball bearings for screw drives



6

**More information**

Machine tools require screw drives that can position a work piece or machine component quickly, efficiently, and precisely. To meet these requirements, screw drives can be supported at both ends by SKF super-precision angular contact thrust ball bearings. The bearings provide a high degree of axial stiffness, high axial load carrying capacity, accommodate high speeds and rapid accelerations, and offer very high running accuracy.

Angular contact thrust ball bearings for screw drives are well suited for screw drive applications, but are also beneficial in other applications, where safe radial and axial support is required, together with extremely precise axial guidance of the shaft.

## Designs and variants

The SKF assortment of super-precision angular contact thrust ball bearings for screw drives can accommodate virtually any requirement placed on support bearings for screw drives. SKF supplies three types of support bearings:

- single direction bearings
- double direction bearings
- cartridge units with a flanged housing

The main criteria used when selecting bearings to support screw drives are axial stiffness and load carrying capacity, running accuracy, speed, and frictional moment. Other factors to consider can be the moment stiffness of a bearing arrangement or the ability to cope with misalignment between the shaft and housing. Mounting and seal requirements also need to be considered. **Table 1** provides an overview of the criteria and to what extent the different bearing series fulfil the requirements.

**Table 1**

**Selection criteria for angular contact thrust ball bearings for screw drives**

| **Bearing type** | Single direction bearings | Double direction bearings | Double direction bearings for bolt mounting | Cartridge units |
|---|---|---|---|---|
| | 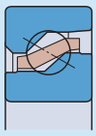 | 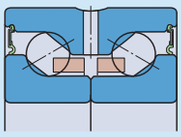 | 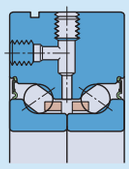 | 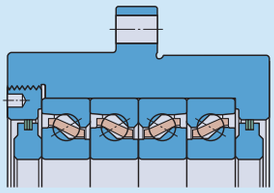 |
| Bearing series | BSA, BSD | BEAS | BEAM | FBSA |
| **Selection criteria** | | | | |
| Axial stiffness | ++ | + | + | ++ |
| Axial load carrying capacity | ++ | ++ | ++ | ++ |
| Running accuracy | ++ | ++ | ++ | ++ |
| Speed capability | ++ | + | + | + |
| Frictional moment | ++ | + | + | ++ |
| Flexibility in arrangement | + | o | o | ++ |
| Easy mounting | o | + | ++ | ++ |
| Seals | non-contact seals (optional) | contact or non-contact seals | contact or non-contact seals | laminar rings |

Symbols: ++ very good + good o suitable

6

## Single direction angular contact thrust ball bearings

SKF supplies single direction angular contact thrust ball bearings (→ **fig. 1**) in the BSA and BSD series for shaft diameters from 12 to 75 mm. The bearings are non-separable and have a 62° contact angle. The transition radius between the raceway and shoulder on both rings is ground. This reduces edge stresses by approximately 30%, enabling these bearings to accommodate heavy axial loads and incidental overloading better than conventional designs.

Single direction bearings are designed to accommodate axial loads in one direction only and are therefore adjusted against a second bearing or mounted as sets. The bearings are universally matchable, as standard, and can be mounted in sets of up to four bearings for a variety of bearing arrangements, reaching the performance level of matched sets. A unique heat treatment helps to maintain a constant bearing preload over the entire service life of the bearings.

### Matched bearing sets

Single direction bearings can be supplied as matched sets on request. However, because the standard bearings are universally matchable, SKF recommends reducing inventory by ordering single bearings only and arranging them in sets as required.

Fig. 1

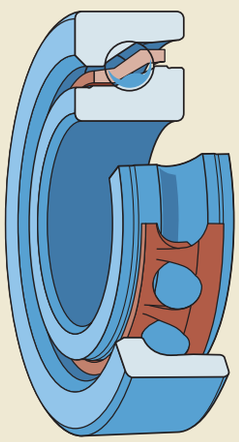

## Double direction angular contact thrust ball bearings

Double direction angular contact thrust ball bearings were developed for applications where space is limited and easy mounting is required. SKF double direction bearings are greased and sealed as standard. These ready-to-mount bearings are available in two series:

- double direction bearings in the BEAS series (→ **fig. 2**), for shaft diameters from 8 to 30 mm
- double direction bearings for bolt mounting in the BEAM series (→ **fig. 3**), for shaft diameters from 12 to 60 mm

### BEAS series

Bearings in the BEAS series correspond in design to two single direction bearings arranged back-to-back. They are non-separable and have a one-piece outer ring, a two-piece inner ring, and a 60° contact angle. The bearings accommodate radial loads, and axial loads in both directions. Preload (which is preset at the factory) is applied by clamping the inner ring halves on the screw drive shaft with, for example, a precision lock nut (→ *Precision lock nuts*, **page 341**).

BEAS bearings have an annular groove and lubrication holes in the outer ring as standard to relubricate the bearing easily and reliably when necessary.

### BEAM series

Bearings in the BEAM series correspond in design to BEAS series bearings except that the outer ring is much thicker and equipped with through holes for attachment bolts. By bolting directly onto an associated component, the design and mounting process is simplified. To enable relubrication, if required, one side face and the bearing outside surface have M6 threaded holes for grease fittings. The holes are plugged on delivery with grub (set) screws. The side face with the threaded hole should be mounted opposite the machine wall. Bearings manufactured to larger tolerances (designation suffix PE) do not have a threaded hole on the outside surface of the bearing and can only be relubricated via the threaded hole in the side face.

BEAM bearings have an annular groove on their outside surface that can be used to dismount the bearing from its seat on the screw drive shaft.



Fig. 2

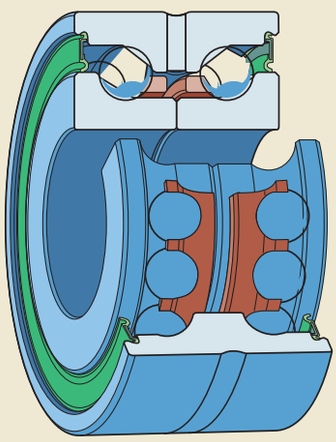

Fig. 3

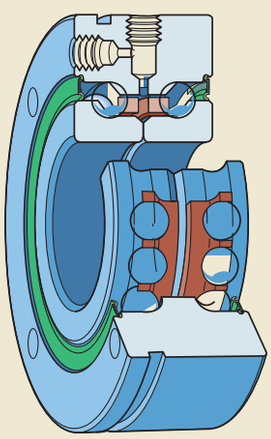

## Cartridge units with a flanged housing

Cartridge units in the FBSA series (→ **fig. 4**) have a flanged housing to enable quick and easy mounting. These ready-to-mount units are available for shaft diameters ranging from 20 to 60 mm and incorporate SKF single direction angular contact thrust ball bearings (→ **page 342**). Except for the ground surfaces, the units are surface-treated with a black-oxide finish.

The units are available with different bearing arrangements (→ **fig. 5**):

- two bearings arranged back-to-back, designation suffix DB
- two bearings arranged face-to-face, designation suffix DF
- two bearing pairs arranged tandem back-to-back, designation suffix QBC
- two bearing pairs arranged tandem face-to-face, designation suffix QFC

Units with two bearing pairs are also available with the flange at the end of the cartridge (designation suffix A). Other bearing arrangements are available on request.

Cartridge units should be bolted to the machine wall and located on the screw drive shaft with an SKF precision lock nut (→ **page 342**).

## Customized solutions

The SKF assortment of support bearings covers a wide variety of application conditions. SKF can also provide customized solutions for specific applications. Advanced modelling and virtual testing services enable SKF engineers to assist in all stages of product development. For additional information, contact the SKF application engineering service.

### Greased bearings

Open, single direction bearings can be supplied greased on request, with the standard grease used for sealed bearings (designation suffix GMM, → *Sealing solutions*, **page 342**).

Customer-specific greases or fill quantities can also be applied to meet the requirements of a specific application.

Fig. 4

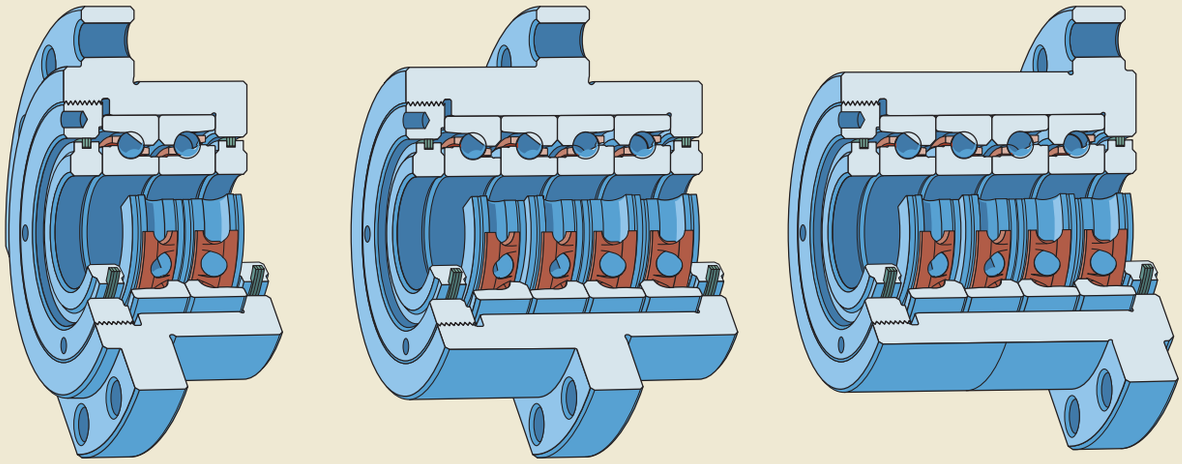

FBSA2.. /DB FBSA 2.. /QBC FBSA 2.. A/QBC

Fig. 5

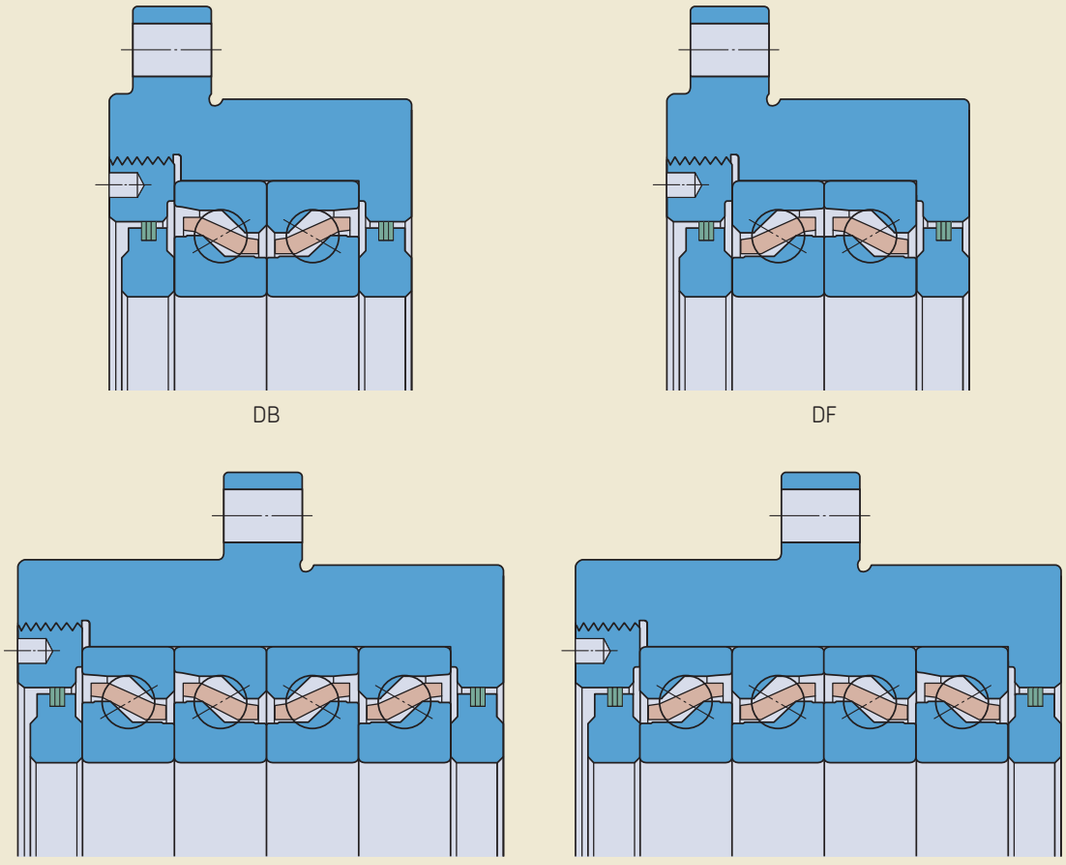

DB DF

QBC QFC

## Cages

Depending on their series, angular contact thrust ball bearings for screw drives are fitted as standard with one of the following cages:

- a glass fibre reinforced PA66 cage, window-type, ball centred, no designation suffix
- a glass fibre reinforced PA66 cage, snap-type, ball centred, no designation suffix

These robust cages are extremely light to minimize centrifugal forces and accommodate rapid accelerations and decelerations.

For additional information about the materials, refer to *Cage materials* (→ **page 344**).

## Sealing solutions

Single direction angular contact thrust ball bearings can be supplied with an integral non-contact seal fitted on each side (designation suffix 2RZ, → **fig. 6**). The seals form an extremely narrow gap with the inner ring shoulder and therefore speed capability is not compromised.

Double direction angular contact thrust ball bearings are sealed as standard (→ **fig. 7**). They can be supplied with a contact seal (designation suffix 2RS) or a non-contact seal (designation suffix 2RZ) fitted on each side. Non-contact seals form an extremely narrow gap with the inner ring shoulder and therefore speed capability is not compromised.

The various seals are made of an oil- and wear-resistant NBR and are reinforced with sheet steel. The permissible operating temperature for seals made of NBR is –40 to +100 °C *(–40 to +210 °F)*. Temperatures up to 120 °C *(250 °F)* can be tolerated for brief periods. For additional information about the materials, refer to *Seal materials* (→ **page 344**).

Cartridge units are protected on both sides with laminar rings (→ **fig. 8**) to prevent both the ingress of contaminants and the egress of grease. These seals do not limit the attainable speed for the single direction angular contact thrust ball bearings within the unit.

Sealed bearings are filled as standard with a high-quality, low-viscosity grease that has a lithium soap thickener and either a mixed ester/PAO base oil (for single direction bearings and cartridge units) or an ester base oil (for double direction bearings). The quantity of grease fills ~ 25 to 35% of the free space in the bearing. The temperature range for the greases are:

- –40 to +120 °C *(–40 to +250 °F)* for single direction bearings
- –55 to +110 °C *(–65 to +230 °F)* for double direction bearings

Under normal operating conditions, the service life of the initial fill will outlast the bearing. If double direction bearings have to accommodate heavy loads and run for long periods at high speeds, relubrication may be necessary. When relubricating, the grease should be applied slowly while the bearing is rotating at normal operating temperature. Excessive

pressure should be avoided as this could damage the seals.

Sealed bearings should not be washed or heated to temperatures above 80 °C *(175 °F)*. If a sealed bearing is to be heated for mounting, an induction heater must be used and the bearing should be fitted immediately.

**Fig. 6**

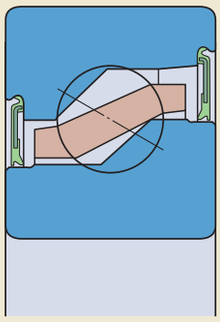

2RZ

**Fig. 7**

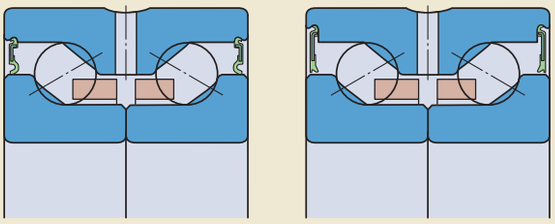

2RS 2RZ

**Fig. 8**

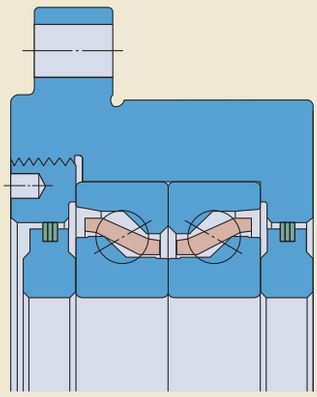

# Bearing arrangement design

Single direction angular contact thrust ball bearings for screw drives enable flexible bearing arrangement designs. As standard, they are universally matchable for mounting as sets with up to four bearings per set.

Universally matchable bearings are specifically manufactured so that when mounted in random order, but immediately adjacent to each other, preload within a predetermined range and effective load sharing will result without the use of shims or similar devices. They have very tight tolerances for the bore and outside diameter as well as for radial run-out.

## Bearing arrangements

### Back-to-back arrangement

In a back-to-back arrangement (→ **fig. 9**), the load lines diverge along the bearing axis. Axial loads acting in both directions can be accommodated, but only by one bearing or bearing set in each direction.

Bearings mounted back-to-back provide a relatively rigid bearing arrangement. The wide span between bearing effective centres makes this arrangement particularly well suited to support moment loads.

### Face-to-face arrangement

In a face-to-face arrangement (→ **fig. 10**), the load lines converge along the bearing axis. Axial loads acting in both directions can be accommodated, but only by one bearing or bearing set in each direction.

The shorter span between effective bearing centres makes face-to-face arrangements less suitable to support moment loads compared to bearings in a back-to-back arrangement.

### Tandem arrangement

The use of a tandem arrangement provides increased axial and radial load carrying capacity compared to a single bearing. In a tandem arrangement (→ **fig. 11**), the load lines are parallel so that radial and axial loads are shared.

The bearing set can only accommodate axial loads acting in one direction. If axial loads act in both directions, or if combined loads are present, additional bearing(s) adjusted against the tandem arrangement must be added.

### Examples

Universally matchable single direction bearings can be arranged in various ways depending on the stiffness and load requirements of the application. The possible arrangements are shown in **fig. 12** (→ **page 346**), including the applicable designation suffixes for matched sets.

If misalignment cannot be avoided between the bearing positions, face-to-face bearing arrangements are recommended. They are less sensitive to misalignment than back-to-back bearing arrangements.

Combinations of tandem arrangements with back-to-back or face-to-face arrangements

Fig. 9

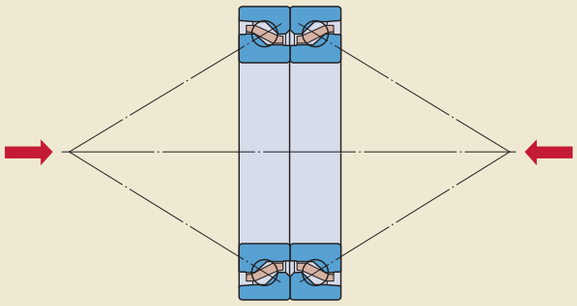

Back-to-back arrangement

are usually selected to maximize the stiffness or load carrying capacity of a bearing set in a particular direction. This is the case, for example, when extended, preloaded, vertical or overhung screw drives must be supported.

## Bearings for the non-locating position

If temperature differences between the screw drive and machine bed require a non-locating bearing in one position, needle roller bearings are suitable, among others. In this case, only the weight of the screw drive loads the bearing. Additional information about needle roller bearings is available at skf.com.

Fig. 10

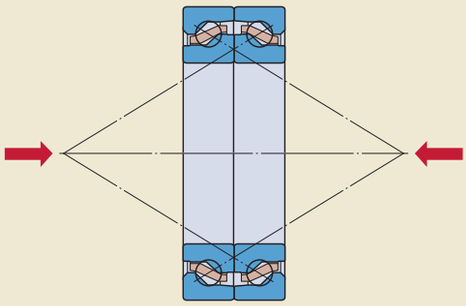

Face-to-face arrangement

Fig. 11

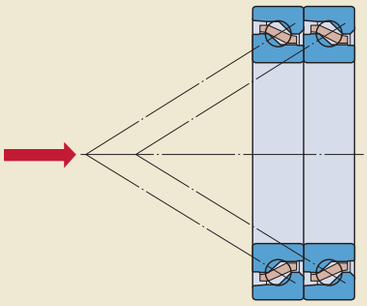

Tandem arrangement

## Angular contact thrust ball bearings for screw drives

Fig. 12

**Bearing sets with 2 bearings**

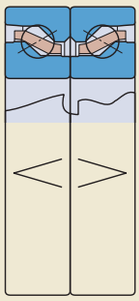

Back-to-back arrangement
Designation suffix DB

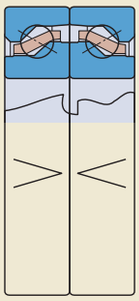

Face-to-face arrangement
Designation suffix DF

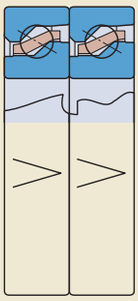

Tandem arrangement
Designation suffix DT

**Bearing sets with 3 bearings**

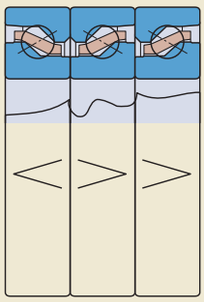

Back-to-back and tandem arrangement
Designation suffix TBT

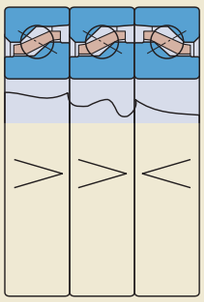

Face-to-face and tandem arrangement
Designation suffix TFT

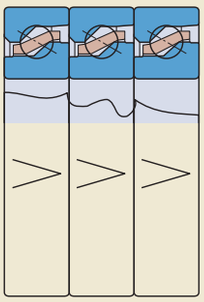

Tandem arrangement
Designation suffix TT

**Bearing sets with 4 bearings**

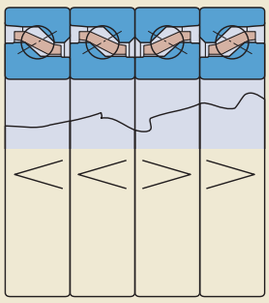

Tandem back-to-back arrangement
Designation suffix QBC

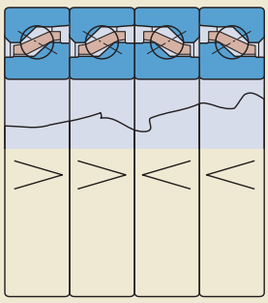

Tandem face-to-face arrangement
Designation suffix QFC

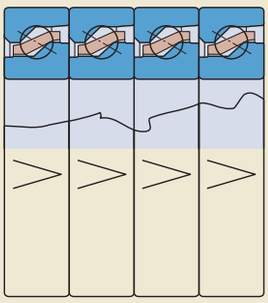

Tandem arrangement
Designation suffix QT

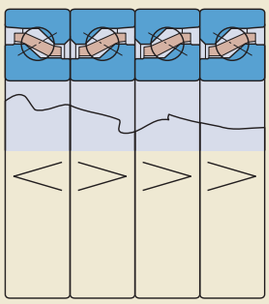

Back-to-back and tandem arrangement
Designation suffix QBT

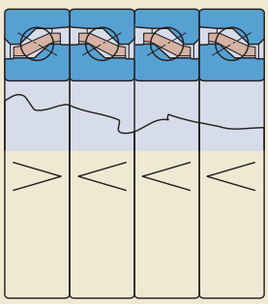

Face-to-face and tandem arrangement
Designation suffix QFT

## Associated components

Associated components should be produced very precisely so that super-precision angular contact thrust ball bearings can meet the demands for high running accuracy. All dimensional and form deviations must be kept as small as possible. The bearing seats on the shaft and in the housing should follow the recommended tolerances listed in **tables 2** to **4**.

**Table 2**

**Geometrical accuracy of bearing shaft seats**

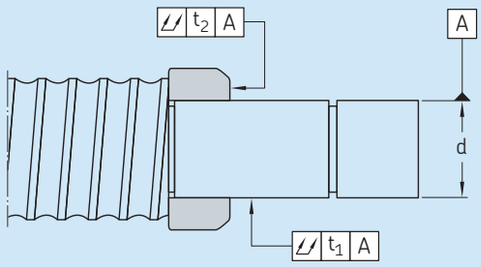


| Shaft diameter d over | incl. | Tolerance h4Ⓔ high | low | Total radial run-out $t_1$ max. | Total axial run-out $t_2$ max. |
|---|---|---|---|---|---|
| mm | | µm | | µm | µm |
| **10** | **18** | 0 | –5 | 2 | 2 |
| **18** | **30** | 0 | –6 | 2,5 | 2,5 |
| **30** | **50** | 0 | –7 | 2,5 | 2,5 |
| **50** | **80** | 0 | –8 | 3 | 3 |

**Table 3**

**Geometrical accuracy of bearing housing seats**

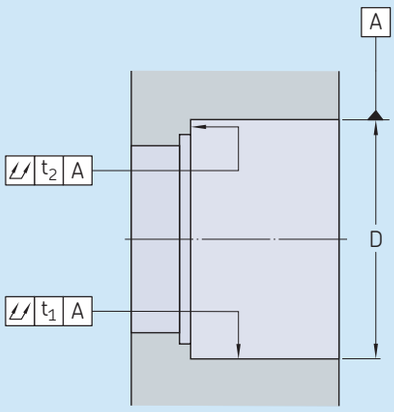


| Housing diameter D over | incl. | Tolerance H5Ⓔ high | low | Total radial run-out $t_1$ max. | Total axial run-out $t_2$ max. |
|---|---|---|---|---|---|
| mm | | µm | | µm | µm |
| **–** | **50** | 11 | 0 | 2,5 | 4 |
| **50** | **80** | 13 | 0 | 3 | 5 |
| **80** | **120** | 15 | 0 | 4 | 6 |
| **120** | **150** | 18 | 0 | 5 | 8 |

**Table 4**

**Geometrical accuracy of the housing bore and side faces for bearings for bolt mounting and cartridge units**

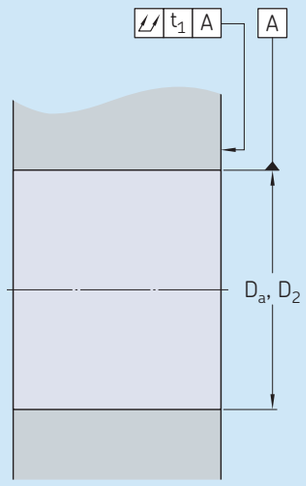


| Housing bore diameter $D_a$, $D_2$ over | incl. | Tolerance H6Ⓔ high | low | Total axial run-out $t_1$ max. |
|---|---|---|---|---|
| mm | | µm | | µm |
| **50** | **80** | 19 | 0 | 5 |
| **80** | **120** | 22 | 0 | 6 |
| **120** | **150** | 25 | 0 | 8 |

## Application examples

Screw drives are typically supported at both ends with bearing sets in a back-to-back or face-to-face arrangement (→ **fig. 13**). With universally matchable single direction bearings, it is possible to adjust the arrangement to the requirements of a particular application. Sealed bearings (→ **fig. 14**) offer additional benefits. There are fewer components to install, the bearing is protected against contaminants, and no lubricant is required during mounting.

For short screw drives, an overhung support at one end is common (→ **fig. 15**). Back-to-back arrangements are best suited for overhung supports.

Double direction bearings (→ **fig. 16**) can further reduce the number of components. Bearings that are bolt mounted (→ **fig. 17**) do not require a housing and can be mounted easily.

For stretched screw drives, particularly stiff bearing arrangements can be designed if tandem arrangements, adjusted against each other, are used at both ends. Cartridge units with a flanged housing are particularly well suited for these screw drive designs (→ **fig. 18**).

Fig. 14

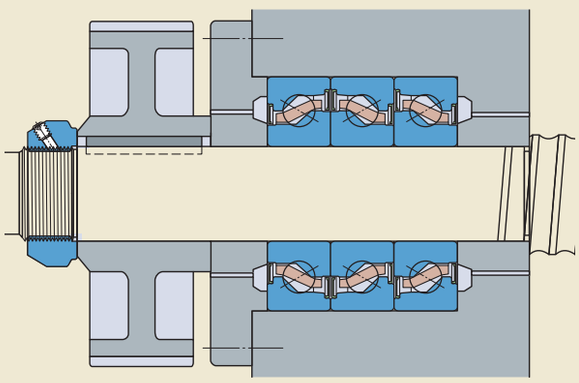

Fig. 13

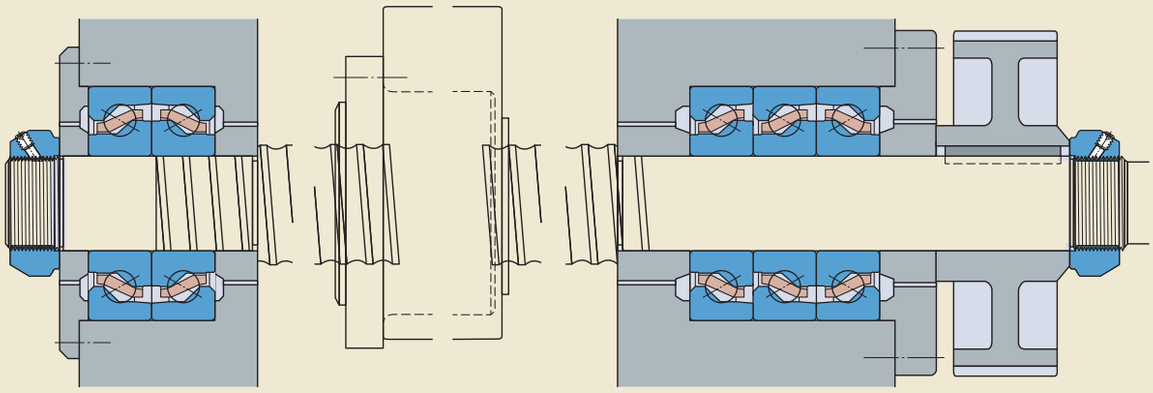

Fig. 15

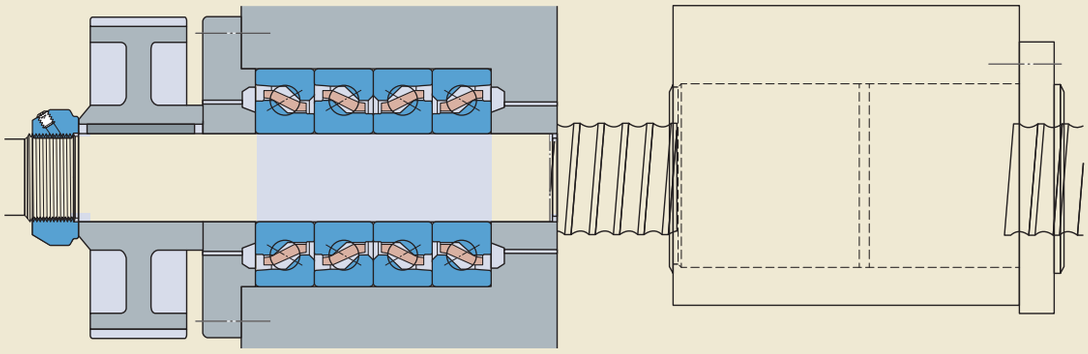

Fig. 16

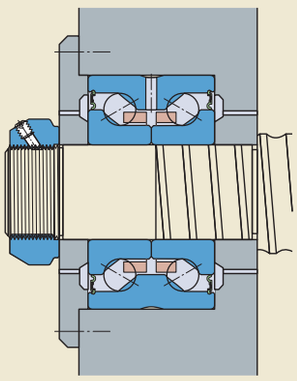

Fig. 17

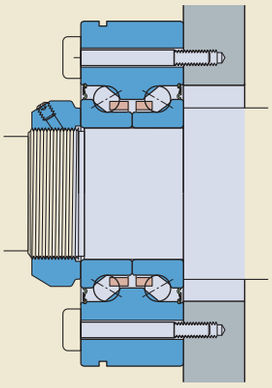

Fig. 18

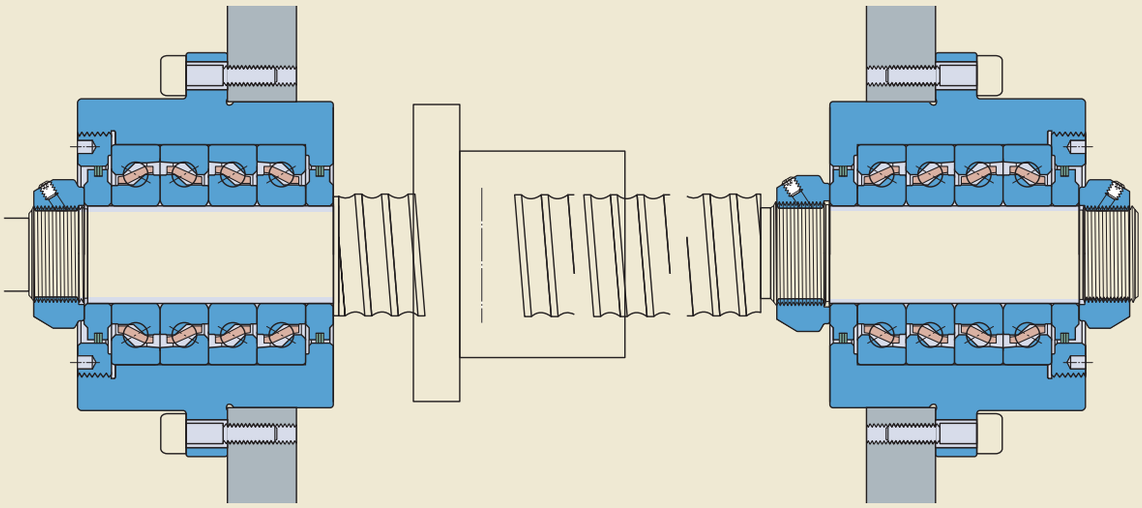

# Markings on bearings

Each super-precision angular contact thrust ball bearing and cartridge unit has various markings on the outside surfaces (→ **fig. 19**):

**1** SKF trademark
**2** Complete designation of the bearing/unit
**3** Country of manufacture
**4** Date of manufacture, coded
**5** "MATCHABLE" label (single direction bearings only)

**"V-shaped" marking**

A "V-shaped" marking on the outside surface of the outer rings of universally matchable single direction bearings indicates how the bearing set should be mounted in relation to the axial load. The "V-shaped" marking points toward the side face of the inner ring that can support axial load. For sets of bearings, the large inner ring side face of the outer bearing should support axial load and should be mounted so that the "V-shaped" marking points in the direction opposite the axial load (→ **fig. 20**). In applications where there are axial loads in both directions supported by face-to-face or back-to-back arrangements, the inner ring side face of the outer bearing, to which the majority of the "V-shaped" markings point to, should support the heavier of the axial loads.

**Fig. 20**

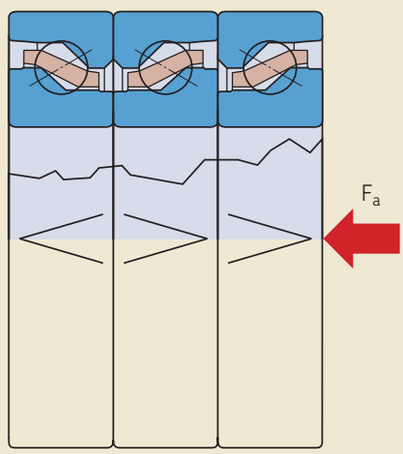


**Fig. 19**

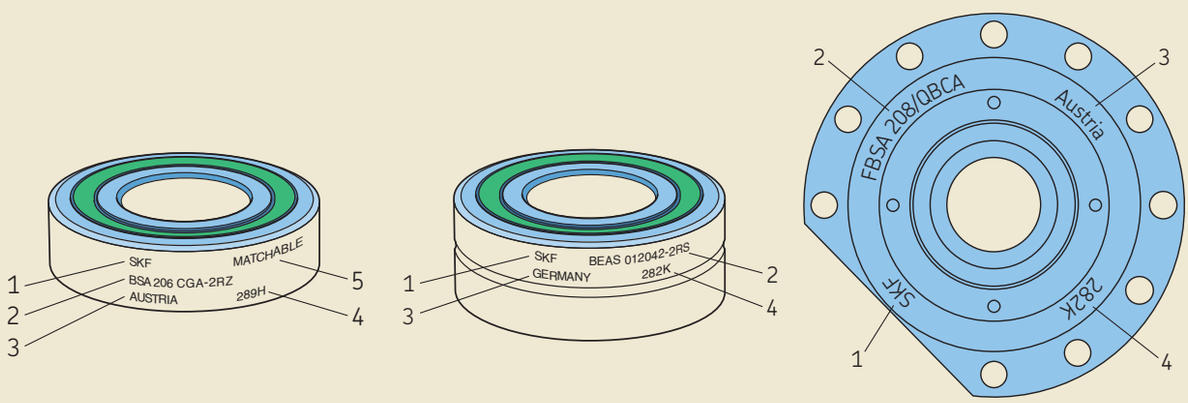


Single direction bearing | Double direction bearing | Cartridge unit

# Bearing data

| | Single direction bearings | Double direction bearings | Cartridge units |
|---|---|---|---|
| **Boundary dimensions** | ISO 15, only for BSA 2 and BSA 3 series that are in accordance with 02 and 03 ISO dimension series respectively<br>BSD series bearings partly follow ISO dimension series | Not standardized | Not standardized |
| **Tolerances**<br><br>For additional information (→ **page 353**) | P4 dimensional accuracy<br>P2 running accuracy<br>Values: ISO 492 (→ **table 5**, **page 353**)<br>The values apply to individual bearings. For matched bearing sets, the axial run-out is usually within 2,5 µm if the bearing seats are machined precisely and the bearings are mounted properly. | P4 running accuracy<br>Values: ISO 492 (→ **table 5**, **page 353**)<br>Dimensional accuracy values:<br>→ **table 5**, **page 353** | Values:<br>→ **table 6**, **page 353** |

Table 5

**Tolerances of single and double direction bearings**

**Inner ring and bearing height**

| d | | Single direction bearings | | | | | Double direction bearings | | | | |
|---|---|---|---|---|---|---|---|---|---|---|---|
| | | $\Delta_{ds}$, $\Delta_{dmp}$ | | $\Delta_{Ts}$ | | $S_{ia}$ | $\Delta_{ds}$, $\Delta_{dmp}$ | | $\Delta_{Bs}$ | | $S_{ia}$ |
| over | incl. | high | low | high | low | max. | high | low | high | low | max. |
| mm | | µm | | µm | | µm | µm | | µm | | µm |
| **10** | **18** | 0 | –4 | 0 | –80 | 1,5 | 0 | –5 | 0 | –250 | 2 |
| **18** | **25** | 0 | –4 | 0 | –120 | 2,5 | 0 | –5 | 0 | –250 | 2 |
| **25** | **30** | 0 | –4 | 0 | –120 | 2,5 | 0 | –5 | 0 | –250 | 2,5 |
| **30** | **50** | 0 | –5 | 0 | –120 | 2,5 | 0 | –5 | 0 | –250 | 2,5 |
| **50** | **60** | 0 | –5 | 0 | –120 | 2,5 | 0 | –8 | 0 | –250 | 2,5 |
| **60** | **80** | 0 | –5 | 0 | –120 | 2,5 | 0 | –8 | 0 | –250 | 3 |

**Outer ring**

| D | | Single direction bearings | | | Double direction bearings | | | | |
|---|---|---|---|---|---|---|---|---|---|
| | | $\Delta_{Ds}$, $\Delta_{Dmp}$ | | $S_{ea}$ | $\Delta_{Ds}$, $\Delta_{Dmp}$ | | $\Delta_{Cs}$ | | $S_{ea}$ |
| over | incl. | high | low | max. | high | low | high | low | max. |
| mm | | µm | | µm | µm | | µm | | µm |
| **30** | **50** | 0 | –5 | 2,5 | 0 | –10 | 0 | –250 | 8 |
| **50** | **80** | 0 | –6 | 4 | 0 | –10 | 0 | –250 | 10 |
| **80** | **110** | 0 | –6 | 5 | 0 | –10 | 0 | –250 | 11 |
| **110** | **120** | 0 | –6 | 5 | 0 | –15 | 0 | –250 | 11 |
| **120** | **150** | 0 | –7 | 5 | 0 | –15 | 0 | –250 | 13 |

Tolerance symbols and definitions → **table 4, page 354**

Table 6

**Tolerances of cartridge units**

| d | | $\Delta_{ds}$, $\Delta_{dmp}$ | | $\Delta_{D2}$ | | $\Delta_{Ts}$ | | $S_{ia}$ [1] |
|---|---|---|---|---|---|---|---|---|
| over | incl. | high | low | high | low | high | low | max. |
| mm | | µm | | µm | | mm | | µm |
| **18** | **30** | 0 | –4 | 0 | –13 | 0 | –1,5 | 2,5 |
| **30** | **50** | 0 | –5 | 0 | –15 | 0 | –1,5 | 2,5 |
| **50** | **60** | 0 | –5 | 0 | –18 | 0 | –1,5 | 2,5 |

Tolerance symbols and definitions → **table 4, page 354**

[1] Axial run-out of a single bearing. The tolerance for the rectangularity of the flange to the housing seat diameter $D_2$ is 5 to 10 µm depending on the size.

# Bearing preload

### Single direction bearings

An individual single direction angular contact thrust ball bearing cannot be preloaded until a second bearing provides location in the opposite direction.

SKF single direction bearings are universally matchable as standard and are manufactured pre-set to two different preload classes:

- class A, light preload
- class B, moderate preload

The amount of preload depends on various factors and applies to bearing sets in back-to-back or face-to-face arrangements. Preload values are not standardized and are listed in **table 7** (→ **page 355**). The values do not cover influences from fits or operating conditions.

Bearing sets with a non-standard preload can be supplied on request. These bearing sets are identified by the designation suffix G followed by a number. The number is the mean preload value of the set expressed in daN.

Bearing sets consisting of three or four bearings have a heavier preload than sets with two bearings. The preload for these bearing sets is obtained by multiplying the values listed in **table 7** by a factor listed in **table 8** (→ **page 355**).

### Double direction bearings

Preload values for double direction angular contact thrust ball bearings are not standardized and are listed in **table 9** (→ **page 355**). The values do not cover influences from fits or operating conditions.

Bearings with a different preload can be supplied on request.

### Cartridge units

Cartridge units contain single direction bearings with class A or B preload values as standard (→ **table 7**, **page 355**). Units containing bearings with a non-standard preload can be supplied on request. Bearing sets with a non-standard preload are identified by the designation suffix G followed by a number. The number is the mean preload value of the set expressed in daN.

## Angular contact thrust ball bearings for screw drives

Table 7

**Axial preload, axial stiffness, frictional moment and maximum axial load of single direction bearings**

| Designation | Axial preload for preload class A | B | Axial stiffness for preload class A | B | Frictional moment for preload class A | B | Maximum axial load |
|---|---|---|---|---|---|---|---|
| – | N | | N/µm | | Nm | | kN |
| **BSA 201** | 650 | 1 300 | 400 | 510 | 0,016 | 0,028 | 6,25 |
| **BSA 202** | 770 | 1 540 | 460 | 580 | 0,022 | 0,038 | 8,5 |
| **BSA 203** | 1 040 | 2 080 | 550 | 700 | 0,04 | 0,072 | 10,3 |
| **BSA 204** | 1 480 | 2 960 | 680 | 860 | 0,05 | 0,091 | 14,5 |
| **BSA 205** | 1 580 | 3 160 | 725 | 925 | 0,069 | 0,12 | 18 |
| **BSA 206** | 2 150 | 4 300 | 870 | 1 110 | 0,12 | 0,21 | 22,6 |
| **BSA 207** | 2 950 | 5 900 | 1 080 | 1 370 | 0,18 | 0,32 | 29,6 |
| **BSA 208** | 3 400 | 6 800 | 1 130 | 1 440 | 0,212 | 0,46 | 37,9 |
| **BSA 209** | 3 750 | 7 500 | 1 290 | 1 640 | 0,23 | 0,52 | 40,2 |
| **BSA 210** | 4 100 | 8 200 | 1 410 | 1 800 | 0,31 | 0,68 | 42,5 |
| **BSA 212** | 6 050 | 12 100 | 1 640 | 2 080 | 0,54 | 1,05 | 65 |
| **BSA 215** | 6 850 | 13 700 | 1 870 | 2 380 | 0,65 | 1,4 | 76 |
| **BSA 305** | 2 150 | 4 300 | 870 | 1 110 | 0,12 | 0,2 | 22,6 |
| **BSA 306** | 3 000 | 6 000 | 1 010 | 1 280 | 0,175 | 0,32 | 46 |
| **BSA 307** | 4 100 | 8 200 | 1 120 | 1 430 | 0,26 | 0,46 | 65 |
| **BSA 308** | 5 100 | 10 200 | 1 340 | 1 710 | 0,35 | 0,62 | 78,2 |
| **BSD 2047** | 1 480 | 2 960 | 680 | 860 | 0,05 | 0,091 | 14,5 |
| **BSD 2562** | 2 150 | 4 300 | 870 | 1 110 | 0,115 | 0,21 | 22,6 |
| **BSD 3062** | 2 150 | 4 300 | 870 | 1 110 | 0,125 | 0,215 | 22,6 |
| **BSD 3572** | 2 950 | 5 900 | 1 080 | 1 370 | 0,18 | 0,32 | 29,6 |
| **BSD 4072** | 2 950 | 5 900 | 1 080 | 1 370 | 0,18 | 0,32 | 29,6 |
| **BSD 4090** | 5 100 | 10 200 | 1 340 | 1 710 | 0,35 | 0,61 | 78,2 |
| **BSD 4575** | 2 900 | 5 800 | 1 180 | 1 500 | 0,25 | 0,41 | 40,2 |
| **BSD 45100** | 5 850 | 11 700 | 1 470 | 1 870 | 0,5 | 0,97 | 107,4 |
| **BSD 50100** | 6 200 | 12 400 | 1 550 | 1 970 | 0,52 | 0,97 | 107,4 |
| **BSD 55100** | 6 200 | 12 400 | 1 550 | 1 970 | 0,52 | 0,97 | 107,4 |
| **BSD 55120** | 7 300 | 14 600 | 1 800 | 2 300 | 0,72 | 1,26 | 130 |
| **BSD 60120** | 7 300 | 14 600 | 1 800 | 2 300 | 0,72 | 1,26 | 130 |

Table 8

**Factors for calculating the preload and frictional moment of a bearing set**

| Number of bearings | Arrangement | Designation suffix | Factor |
|---|---|---|---|
| 3 | Back-to-back and tandem | TBT | 1,35 |
| | Face-to-face and tandem | TFT | 1,35 |
| 4 | Back-to-back and tandem | QBT | 1,55 |
| | Face-to-face and tandem | QFT | 1,55 |
| | Tandem back-to-back | QBC | 2 |
| | Tandem face-to-face | QFC | 2 |

Table 9

**Axial preload, stiffness, and frictional moment of double direction bearings**

| Designation | Axial preload | Stiffness Axial | Stiffness Moment | Frictional moment[1] |
|---|---|---|---|---|
| – | N | N/µm | Nm/mrad | Nm |
| **BEAS 008032** | 300 | 250 | 20 | 0,08 |
| **BEAS 012042** | 600 | 350 | 80 | 0,16 |
| **BEAS 015045** | 650 | 400 | 65 | 0,2 |
| **BEAS 017047** | 720 | 420 | 80 | 0,24 |
| **BEAS 020052** | 1 650 | 650 | 150 | 0,3 |
| **BEAS 025057** | 1 920 | 770 | 200 | 0,4 |
| **BEAS 030062** | 2 170 | 870 | 300 | 0,5 |
| **BEAM 012055** | 600 | 350 | 80 | 0,16 |
| **BEAM 017062** | 720 | 420 | 80 | 0,24 |
| **BEAM 020068** | 1 650 | 650 | 150 | 0,3 |
| **BEAM 025075** | 1 920 | 770 | 200 | 0,4 |
| **BEAM 030080** | 2 170 | 870 | 300 | 0,5 |
| **BEAM 030100** | 3 900 | 950 | 470 | 0,8 |
| **BEAM 035090** | 2 250 | 900 | 400 | 0,6 |
| **BEAM 040100** | 2 550 | 1 000 | 570 | 0,7 |
| **BEAM 040115** | 4 750 | 1 150 | 720 | 1,3 |
| **BEAM 050115** | 3 100 | 1 250 | 1 000 | 0,69 |
| **BEAM 050140** | 5 720 | 1 350 | 1 500 | 2,6 |
| **BEAM 060145** | 4 700 | 1 400 | 1 750 | 2 |

[1] The guideline values apply to bearings with contact seals (designation suffix 2RS). For bearings with non-contact seals (designation suffix 2RZ), the frictional moment is 50% of the values listed above.

# Axial stiffness

### Single direction bearings

The axial stiffness values for single direction bearings are listed in **table 7** (→ **page 358**). They apply to unmounted bearing sets with two bearings arranged back-to-back or face-to-face.

Bearing sets consisting of three or four bearings provide a higher degree of axial stiffness than sets with two bearings. The axial stiffness for these bearing sets is obtained by multiplying the values listed in **table 7** by a factor listed in **table 10**. The lower value factor applies to bearings under light axial load ($P \leq 0{,}05\ C$) and the larger value to bearings under heavy axial load ($P > 0{,}1\ C$). To determine the equivalent dynamic bearing load P, refer to **page 358**.

Bearing sets with a heavier preload provide an even higher degree of stiffness. However, this should be avoided as heavier preload substantially increases friction and heat generated by the bearing. In cases where an extremely high degree of stiffness is required, the frictional behaviour as a function of increasing preload can be estimated using the simulation tool SKF Spindle Simulator. For additional information, contact the SKF application engineering service.

### Double direction bearings

Values for axial and moment stiffness for double direction angular contact thrust ball bearings are listed in **table 9** (→ **page 358**) and apply to the preload set at the factory. The values do not cover influences from fits or operating conditions.

### Cartridge units

For cartridge units, axial stiffness is listed in **table 11**. The values correspond to those for the included single direction bearings, multiplied by the factors provided in **table 10**.

Table 10

**Factors for calculating the axial stiffness of a bearing set**

| Number of bearings | Arrangement | Designation suffix | Factor |
|---|---|---|---|
| 3 | Back-to-back and tandem | TBT | 1,45 to 1,65 |
| | Face-to-face and tandem | TFT | 1,45 to 1,65 |
| 4 | Back-to-back and tandem | QBT | 1,8 to 2,25 |
| | Face-to-face and tandem | QFT | 1,8 to 2,25 |
| | Tandem back-to-back | QBC | 2 |
| | Tandem face-to-face | QFC | 2 |

Table 11

**Axial stiffness and frictional moment of cartridge units**

| Designation | Axial stiffness for preload class A | B | Frictional moment for preload class A | B |
|---|---|---|---|---|
| – | N/µm | | Nm | |
| **FBSA 204/DB** | 680 | 860 | 0,05 | 0,091 |
| **FBSA 204/DF** | 680 | 860 | 0,05 | 0,091 |
| **FBSA 204/QBC** | 1 360 | 1 720 | 0,1 | 0,182 |
| **FBSA 204/QFC** | 1 360 | 1 720 | 0,1 | 0,182 |
| **FBSA 205/DB** | 725 | 925 | 0,069 | 0,12 |
| **FBSA 205/DF** | 725 | 925 | 0,069 | 0,12 |
| **FBSA 205/QBC** | 1 450 | 1 850 | 0,138 | 0,24 |
| **FBSA 205/QFC** | 1 450 | 1 850 | 0,138 | 0,24 |
| **FBSA 206/DB** | 870 | 1 110 | 0,12 | 0,21 |
| **FBSA 206/DF** | 870 | 1 110 | 0,12 | 0,21 |
| **FBSA 206/QBC** | 1 740 | 2 220 | 0,24 | 0,42 |
| **FBSA 206/QFC** | 1 740 | 2 220 | 0,24 | 0,42 |
| **FBSA 206 A/QBC** | 1 740 | 2 220 | 0,24 | 0,42 |
| **FBSA 206 A/QFC** | 1 740 | 2 220 | 0,24 | 0,42 |
| **FBSA 207/DB** | 1 080 | 1 370 | 0,18 | 0,32 |
| **FBSA 207/DF** | 1 080 | 1 370 | 0,18 | 0,32 |
| **FBSA 207/QBC** | 2 160 | 2 740 | 0,36 | 0,64 |
| **FBSA 207/QFC** | 2 160 | 2 740 | 0,36 | 0,64 |
| **FBSA 208/DB** | 1 130 | 1 440 | 0,212 | 0,46 |
| **FBSA 208/DF** | 1 130 | 1 440 | 0,212 | 0,46 |
| **FBSA 208/QBC** | 2 260 | 2 880 | 0,424 | 0,92 |
| **FBSA 208/QFC** | 2 260 | 2 880 | 0,424 | 0,92 |
| **FBSA 208 A/QBC** | 2 260 | 2 880 | 0,424 | 0,92 |
| **FBSA 208 A/QFC** | 2 260 | 2 880 | 0,424 | 0,92 |
| **FBSA 209/DB** | 1 290 | 1 640 | 0,23 | 0,52 |
| **FBSA 209/DF** | 1 290 | 1 640 | 0,23 | 0,52 |
| **FBSA 209/QBC** | 2 580 | 3 280 | 0,46 | 1,04 |
| **FBSA 209/QFC** | 2 580 | 3 280 | 0,46 | 1,04 |
| **FBSA 210/DB** | 1 410 | 1 800 | 0,31 | 0,68 |
| **FBSA 210/DF** | 1 410 | 1 800 | 0,31 | 0,68 |
| **FBSA 210/QBC** | 2 820 | 3 600 | 0,62 | 1,36 |
| **FBSA 210/QFC** | 2 820 | 3 600 | 0,62 | 1,36 |
| **FBSA 210 A/QBC** | 2 820 | 3 600 | 0,62 | 1,36 |
| **FBSA 210 A/QFC** | 2 820 | 3 600 | 0,62 | 1,36 |
| **FBSA 212 A/QBC** | 3 280 | 4 160 | 1,08 | 2,1 |
| **FBSA 212 A/QFC** | 3 280 | 4 160 | 1,08 | 2,1 |

# Frictional moment

All SKF angular contact thrust ball bearings for screw drives are designed for low friction operation. The frictional moment depends on the preload, rotational speed, seals and quantity of lubricant in the bearing set. The starting torque is typically double the frictional moment.

### Single direction bearings

Guideline values for the frictional moment of single direction bearings are listed in **table 7** (→ **page 360**) and apply to unmounted bearing sets with two bearings arranged back-to-back or face-to-face that will operate at low speeds.

Bearing sets consisting of three or four bearings have a higher frictional moment than sets with two bearings. The frictional moment for these bearing sets is obtained by multiplying the values in **table 7** by a factor provided in **table 8** (→ **page 360**).

### Double direction bearings

Guideline values for the frictional moment of double direction bearings are listed in **table 9** (→ **page 360**) and apply to unmounted bearings that will operate at low speeds.

### Cartridge units

Guideline values for the frictional moment of cartridge units are listed in **table 11** (→ **page 360**) and apply to unmounted bearings that will operate at low speeds.

# Lifting force

The external axial load on a preloaded bearing set or double direction bearing causing one ball set to become completely unloaded is called the lifting force (→ *Influence of an external load on preloaded bearing sets*, **page 360**). The lifting force for sets of single direction bearings arranged back-to-back or face-to-face and double direction bearings can be estimated using

$$K_{a1} = 2{,}83\ F_0$$

where
$K_{a1}$ = lifting force
$F_0$ = preload on bearings before external axial load is applied (→ **table 7**, **page 360** and **table 9**, **page 360**)

For additional information, contact the SKF application engineering service.

## Load carrying capacity of bearing sets

The dynamic load rating C and the static load rating $C_0$, as well as the fatigue load limit $P_u$ listed in the product tables for single direction bearings apply to axial loads for individual bearings. For bearing sets, the relevant values can be obtained by applying the factors listed in **table 12** to the ratings listed for single bearings.

## Equivalent bearing loads

### Equivalent dynamic bearing load

If individual single direction bearings, bearing sets, or double direction bearings have to accommodate both axial and radial loads, the equivalent dynamic bearing load for each direction of axial load can be determined as follows:

$F_a/F_r \leq 2{,}35 \rightarrow P = X\,F_r + Y\,F_a$
$F_a/F_r > 2{,}35 \rightarrow P = 0{,}97\,F_r + F_a$

For bearings that accommodate axial loads only:

$P = F_a$

**Table 12**

**Load ratings, fatigue load limit, and calculation factors for bearing sets with single direction bearings**

| Number of bearings | Arrangement | Designation suffix | Graphic representation | Load direction | Load rating of bearing set dynamic | Load rating of bearing set static | Fatigue load limit of bearing set | Calculation factors X | Calculation factors Y |
|---|---|---|---|---|---|---|---|---|---|
| 2 | Back-to-back | DB | <> | → | C | $C_0$ | $P_u$ | 2,04 | 0,54 |
| | Face-to-face | DF | >< | → | C | $C_0$ | $P_u$ | 2,04 | 0,54 |
| | Tandem | DT | << | → | 1,63 C | 2 $C_0$ | 2 $P_u$ | – | – |
| 3 | Back-to-back and tandem | TBT | <>> | → | C | $C_0$ | $P_u$ | 1,54 | 0,75 |
| | | | <>> | ← | 1,63 C | 2 $C_0$ | 2 $P_u$ | 2,5 | 0,33 |
| | Face-to-face and tandem | TFT | >>< | ← | C | $C_0$ | $P_u$ | 1,54 | 0,75 |
| | | | >>< | → | 1,63 C | 2 $C_0$ | 2 $P_u$ | 2,5 | 0,33 |
| | Tandem | TT | <<< | → | 2,16 C | 3 $C_0$ | 3 $P_u$ | – | – |
| 4 | Back-to-back and tandem | QBT | <<<> | ← | C | $C_0$ | $P_u$ | 1,26 | 0,87 |
| | | | <<<> | → | 2,16 C | 3 $C_0$ | 3 $P_u$ | 2,71 | 0,25 |
| | Face-to-face and tandem | QFT | >>>< | ← | C | $C_0$ | $P_u$ | 1,26 | 0,87 |
| | | | >>>< | → | 2,16 C | 3 $C_0$ | 3 $P_u$ | 2,71 | 0,25 |
| | Tandem back-to-back | QBC | <<>> | → | 1,63 C | 2 $C_0$ | 2 $P_u$ | 2,04 | 0,54 |
| | Tandem face-to-face | QFC | >>>< | → | 1,63 C | 2 $C_0$ | 2 $P_u$ | 2,04 | 0,54 |
| | Tandem | QT | <<<< | → | 2,64 C | 4 $C_0$ | 4 $P_u$ | – | – |

where
P = equivalent dynamic load [kN]
$F_r$ = radial load [kN]
$F_a$ = axial load [kN]
X = radial load factor
– for single direction bearings:
→ **table 12**, **page 362**
– for double direction bearings: 1,9
Y = axial load factor
– for single direction bearings:
→ **table 12**
– for double direction bearings: 0,55

Preload is considered to be an axial load. For bearing sets in any arrangement, the equivalent dynamic bearing load must be calculated separately for each load direction.

### Equivalent static bearing load

If individual single direction bearings, bearing sets, or double direction bearings have to accommodate both axial and radial loads, the equivalent static bearing load for each direction of axial load can be determined as follows:

$$P_0 = F_a + 4{,}35\ F_r$$

where
$P_0$ = equivalent static load [kN]
$F_r$ = radial load [kN]
$F_a$ = axial load [kN]

Preload is considered to be an axial load. For bearing sets, in any arrangement, the equivalent static bearing load must be calculated separately for each load direction.

The equation for equivalent static bearing load applies to individual bearings and for bearings in a tandem arrangement if the load ratio $F_a/F_r$ is not lower than 4. When $F_a/F_r$ is between 4 and 2,5 the equation still provides useable approximation values.

## Axial load carrying capacity

With increasing axial load, the contact conditions in the bearing change. The contact angle and especially the size of the contact ellipses increase, and there may be increased stress at the ring shoulder/raceway transitions. This stress is kept to a minimum for SKF super-precision bearings by appropriate measures, such as rounded and ground transition zones. Even so, the guideline values for the maximum axial load (→ **table 7**, **page 362**) should not be exceeded.

## Mounting

Mounting instructions are either printed on the inside of the bearing box or included as a leaflet. For general information about mounting and dismounting super-precision bearings, refer to *Mounting and dismounting* (→ **page 362**).

# Attainable speeds

The attainable speeds listed in the product tables are guideline values and are valid under certain conditions. For additional information, refer to *Attainable speeds* on **page 363**.

### Single direction bearings

The values listed for oil lubrication apply to the oil-air lubrication method and should be reduced if other oil lubrication methods are used.

The values listed for grease lubrication are maximum values that can be attained with sealed bearings or open bearings with an appropriate fill of a suitable, high-quality, soft consistency grease. For additional information, contact the SKF application engineering service.

If bearing sets with two or more bearings are mounted immediately adjacent to each other, the attainable speeds listed in the product table (→ **page 363**) need to be reduced. Values for the maximum rotational speeds in these cases can be obtained by multiplying the guideline value listed in the product tables by a reduction factor (→ **table 13**) dependent on the preload and number of bearings in the arrangement.

### Double direction bearings

The attainable speeds listed in the product tables (→ **pages 363** and **363**) for double direction bearings depend on the type of seal and are limited as follows:

- for bearings with contact seals (designation suffix 2RS) by the permissible sliding speed at the seal lip
- for bearings with non-contact seals (designation suffix 2RZ) by the speeds permitted for grease lubrication

### Cartridge units

The attainable speeds listed in the product table (→ **page 363**) for cartridge units apply to mounted, grease lubricated units.

**Table 13**

**Speed reduction factors for bearing sets**

| **Number of bearings** | **Speed reduction factor** for preload class A | B |
|---|---|---|
| **2** | 0,8 | 0,4 |
| **3** | 0,65 | 0,3 |
| **4** | 0,5 | 0,25 |

# Designation system

**Examples:**

| | | | | | | |
|---|---|---|---|---|---|---|
| Single direction bearing – BSA 205 CGB/GMM | BSA 2 | 05 | C | GB | | / |
| Matched set of single direction bearings – BSA 208 C/TFTA | BSA 2 | 08 | C | | | / |
| Double direction bearing – BEAM 030080-2RS/PE | BEAM | 030080 | | | -2RS | |
| Cartridge unit – FBSA 206 A/QBCA | FSBA 2 | 06 | A | | | |

**Bearing series**

**BSA 2** Single direction bearing in the 02 ISO dimension series
**BSA 3** Single direction bearing in the 03 ISO dimension series
**BSD** Single direction bearing
**BEAS** Double direction bearing
**BEAM** Double direction bearing for bolt mounting
**FBSA 2** Cartridge unit with a flanged housing

**Bearing size**

For single direction bearings in accordance with an ISO dimension series
**01** 12 mm bore diameter
**02** 15 mm bore diameter
**03** 17 mm bore diameter
**04** (x5) 20 mm bore diameter
to
**15** (x5) 75 mm bore diameter

For single direction bearings, not standardized
**2047** 20 mm bore diameter and 47 mm outside diameter
to
**60120** 60 mm bore diameter and 120 mm outside diameter

For double direction bearings
**008032** 8 mm bore diameter and 32 mm outside diameter
to
**060145** 60 mm bore diameter and 145 mm outside diameter

**Design features**

**C** Improved internal design (single direction bearings only)
**A** Different flange position (cartridge units only)

**Single direction bearing – execution and preload**

**GA** Universally matchable, light preload
**GB** Universally matchable, moderate preload
**G...** Universally matchable, special preload, expressed in daN e.g. G240

**Sealing solutions**

**-2RS** Contact seal on both sides, NBR
**-2RZ** Non-contact seal on both sides, NBR

| | | | |
|---|---|---|---|
| GMM | | | |
| | | TFT | A |
| | PE | | |
| | | QBC | A |

**Bearing set – preload**

| | |
|---|---|
| **A** | Light preload |
| **B** | Moderate preload |
| **G...** | Special preload, expressed in daN e.g. G240 |

**Bearing arrangement**

| | |
|---|---|
| **DB** | Set of two bearings arranged back-to-back <> |
| **DF** | Set of two bearings arranged face-to-face >< |
| **DT** | Set of two bearings arranged in tandem << |
| **TBT** | Set of three bearings arranged back-to-back and tandem <>> |
| **TFT** | Set of three bearings arranged face-to-face and tandem >>< |
| **TT** | Set of three bearings arranged in tandem <<< |
| **QBC** | Set of four bearings arranged tandem back-to-back <<>> |
| **QFC** | Set of four bearings arranged tandem face-to-face >>< |
| **QBT** | Set of four bearings arranged back-to-back and tandem <>>> |
| **QFT** | Set of four bearings arranged face-to-face and tandem >>< |
| **QT** | Set of four bearings arranged in tandem <<<< |

**Tolerance class**

| | |
|---|---|
| **–** | Dimensional accuracy to ISO tolerance class 4, running accuracy to ISO tolerance class 2 |
| **PE** | Enlarged diameter tolerance and axial run-out to P5 tolerance class for radial bearing (BEAM/BEAS series only) |

**Grease fill**

| | |
|---|---|
| **GMM** | Open single direction bearing filled with standard grease |

# 6.1 Single direction angular contact thrust ball bearings

d **12 – 75** mm

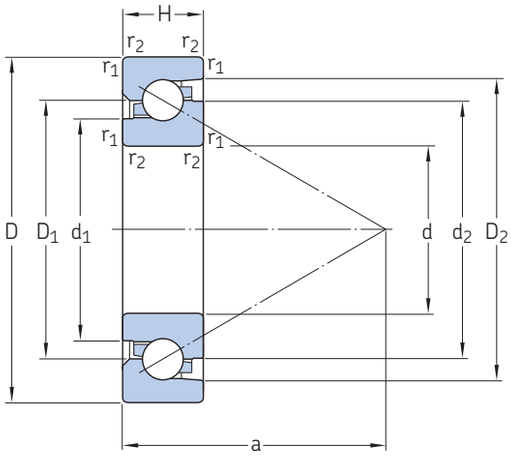


| Principal dimensions | | | Basic load ratings | | Fatigue load limit | Attainable speeds | | Mass | Designation |
|---|---|---|---|---|---|---|---|---|---|
| | | | dynamic | static | | Grease lubrication | Oil-air lubrication | | |
| d | D | H | C | $C_0$ | $P_u$ | | | | |
| mm | | | kN | | kN | r/min | | kg | – |
| **12** | 32 | 10 | 11,8 | 21,2 | 0,8 | 14 000 | 17 000 | 0,043 | **BSA 201 C** |
| **15** | 35 | 11 | 12,7 | 25,5 | 0,95 | 12 000 | 15 000 | 0,054 | **BSA 202 C** |
| **17** | 40 | 12 | 16,6 | 34,5 | 1,27 | 11 000 | 15 000 | 0,078 | **BSA 203 C** |
| **20** | 47 | 14 | 22 | 49 | 1,8 | 9 500 | 12 000 | 0,12 | **BSA 204 C** |
| | 47 | 15 | 22 | 49 | 1,8 | 9 500 | 12 000 | 0,13 | **BSD 2047 C** |
| **25** | 52 | 15 | 22,4 | 52 | 1,93 | 9 000 | 11 000 | 0,15 | **BSA 205 C** |
| | 62 | 15 | 28,5 | 71 | 2,65 | 8 000 | 9 500 | 0,24 | **BSD 2562 C** |
| | 62 | 17 | 28,5 | 71 | 2,65 | 8 000 | 9 500 | 0,27 | **BSA 305 C** |
| **30** | 62 | 15 | 28,5 | 71 | 2,65 | 8 000 | 9 500 | 0,22 | **BSD 3062 C** |
| | 62 | 16 | 28,5 | 71 | 2,65 | 8 000 | 9 500 | 0,23 | **BSA 206 C** |
| | 72 | 19 | 41,5 | 104 | 3,9 | 7 000 | 9 500 | 0,41 | **BSA 306 C** |
| **35** | 72 | 15 | 36,5 | 98 | 3,65 | 7 500 | 9 000 | 0,3 | **BSD 3572 C** |
| | 72 | 17 | 36,5 | 98 | 3,65 | 7 500 | 9 000 | 0,33 | **BSA 207 C** |
| | 80 | 21 | 57 | 146 | 5,4 | 6 700 | 9 500 | 0,56 | **BSA 307 C** |
| **40** | 72 | 15 | 36,5 | 98 | 3,65 | 7 500 | 9 000 | 0,26 | **BSD 4072 C** |
| | 80 | 18 | 42,5 | 112 | 4,15 | 6 300 | 7 500 | 0,43 | **BSA 208 C** |
| | 90 | 20 | 64 | 170 | 6,3 | 6 000 | 7 000 | 0,68 | **BSD 4090 C** |
| | 90 | 23 | 67 | 180 | 6,7 | 5 300 | 7 000 | 0,77 | **BSA 308 C** |
| **45** | 75 | 15 | 32,5 | 98 | 3,65 | 7 500 | 9 000 | 0,26 | **BSD 4575 C** |
| | 85 | 18 | 45 | 134 | 4,9 | 6 300 | 7 500 | 0,51 | **BSA 209 C** |
| | 100 | 20 | 65,5 | 183 | 6,7 | 5 600 | 6 700 | 0,77 | **BSD 45100 C** |
| **50** | 90 | 20 | 46,5 | 146 | 5,4 | 6 000 | 7 000 | 0,56 | **BSA 210 C** |
| | 100 | 20 | 67 | 193 | 7,2 | 5 600 | 6 700 | 0,71 | **BSD 50100 C** |
| **55** | 100 | 20 | 67 | 193 | 7,2 | 5 600 | 6 700 | 0,66 | **BSD 55100 C** |
| | 120 | 20 | 69,5 | 228 | 8,5 | 5 000 | 6 000 | 1,15 | **BSD 55120 C** |
| **60** | 110 | 22 | 69,5 | 216 | 8 | 5 000 | 6 000 | 0,95 | **BSA 212 C** |
| | 120 | 20 | 69,5 | 228 | 8,5 | 5 000 | 6 000 | 1,05 | **BSD 60120 C** |
| **75** | 130 | 25 | 72 | 245 | 9,15 | 4 300 | 5 000 | 1,45 | **BSA 215 C** |

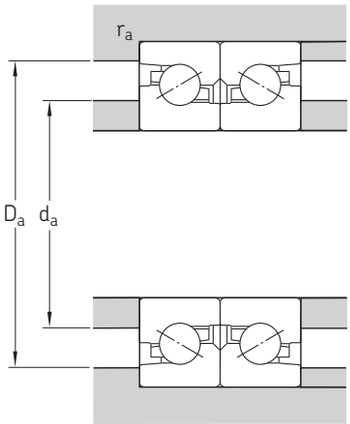


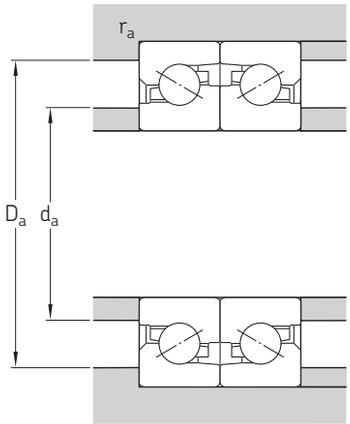


| Dimensions | | | | | | | Abutment and fillet dimensions | | | Reference grease quantity[1] |
|---|---|---|---|---|---|---|---|---|---|---|
| d | $d_1$ | $d_2$ | $D_1$ | $D_2$ | $r_{1,2}$ min. | a | $d_a$ min. | $D_a$ max. | $r_a$ max. | $G_{ref}$ |
| mm | | | | | | | mm | | | $cm^3$ |
| **12** | 17,8 | 22 | 22,1 | 26,7 | 0,6 | 26 | 17 | 29 | 0,6 | 0,4 |
| **15** | 20,8 | 25 | 25,1 | 29,6 | 0,6 | 29 | 20 | 32 | 0,6 | 0,5 |
| **17** | 24,1 | 29 | 29,1 | 34,4 | 0,6 | 33 | 23 | 37 | 0,6 | 0,5 |
| **20** | 29,4 | 34,5 | 29,1 | 40,7 | 1 | 40 | 24 | 42 | 1 | 1,2 |
| | 29,4 | 34,5 | 34,6 | 40,7 | 1 | 40 | 27 | 42,5 | 1 | 1,4 |
| **25** | 33,4 | 38,5 | 38,6 | 44,7 | 1 | 44 | 32 | 47,5 | 1 | 1,5 |
| | 39,9 | 46 | 46,1 | 53 | 1 | 51 | 34 | 57 | 1 | 2 |
| | 39,9 | 46 | 46,1 | 53 | 1 | 52 | 34 | 57 | 1 | 2,4 |
| **30** | 39,9 | 46 | 46,1 | 53 | 1 | 51 | 38 | 57 | 1 | 2 |
| | 39,9 | 46 | 46,1 | 53 | 1 | 51 | 37 | 57 | 1 | 2,2 |
| | 43,9 | 51 | 51,1 | 59,5 | 1 | 57 | 40 | 65,5 | 1 | 3,5 |
| **35** | 48,6 | 55 | 55,1 | 62,7 | 1,1 | 59 | 44 | 64,8 | 1 | 2,5 |
| | 48,6 | 55 | 55,1 | 62,7 | 1,1 | 60 | 44 | 66 | 1 | 3 |
| | 50,1 | 58,5 | 58,6 | 68,6 | 1 | 66 | 47 | 72,5 | 1 | 4,2 |
| **40** | 48,6 | 55 | 55,1 | 62,7 | 1,1 | 59 | 47,5 | 65 | 1 | 2,5 |
| | 50,3 | 58 | 58,1 | 66,5 | 1,1 | 64 | 48 | 74 | 1 | 3,7 |
| | 57,5 | 66,5 | 66,6 | 77,3 | 1,5 | 73 | 53 | 81 | 1,5 | 5,2 |
| | 57,5 | 66,5 | 66,6 | 77,3 | 1,5 | 74 | 53 | 81 | 1,5 | 6,4 |
| **45** | 54,3 | 60 | 60,1 | 66,9 | 1,1 | 64 | 53 | 69 | 1 | 2,7 |
| | 59,4 | 67 | 67,1 | 75,5 | 1,1 | 73 | 53 | 79,5 | 1 | 4,5 |
| | 61,7 | 71,5 | 71,6 | 82,3 | 1,5 | 77 | 59 | 90 | 1,5 | 5,9 |
| **50** | 64,4 | 72 | 72,1 | 80,5 | 1,1 | 78 | 59 | 84 | 1 | 5,2 |
| | 66,9 | 77 | 77,1 | 87,8 | 1,5 | 82 | 65 | 90,5 | 1,5 | 6,5 |
| **55** | 66,9 | 77 | 77,1 | 87,8 | 1,5 | 82 | 67 | 91 | 1,5 | 6,5 |
| | 80,9 | 91 | 91,1 | 101,8 | 1,5 | 96 | 69 | 110 | 1,5 | 7,5 |
| **60** | 76,9 | 87 | 87,1 | 97,8 | 1,1 | 93 | 71 | 102 | 1,5 | 8,5 |
| | 80,9 | 91 | 91,1 | 101,8 | 1,5 | 96 | 73 | 111 | 1,5 | 7,5 |
| **75** | 91,2 | 100 | 100,1 | 110,8 | 1,5 | 107 | 85 | 122 | 1,5 | 11 |

[1] For calculating the initial grease fill → **page 367**

# 6.2 Double direction angular contact thrust ball bearings

d **8 – 30** mm

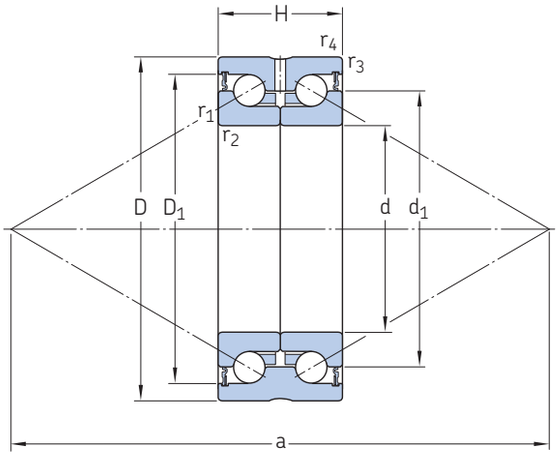


2RS

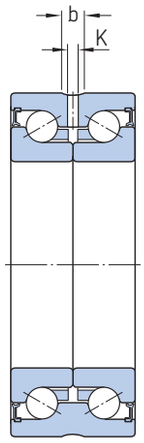


2RZ

| Principal dimensions | | | Basic load ratings dynamic | static | Fatigue load limit | Attainable speed | Mass | Designation |
|---|---|---|---|---|---|---|---|---|
| d | D | H | C | $C_0$ | $P_u$ | | | |
| mm | | | kN | | kN | r/min | kg | – |
| **8** | 32 | 20 | 12,5 | 16,3 | 0,6 | 5 300 | 0,09 | **BEAS 008032-2RS** |
| | 32 | 20 | 12,5 | 16,3 | 0,6 | 8 800 | 0,09 | **BEAS 008032-2RZ** |
| **12** | 42 | 25 | 16,8 | 24,5 | 0,915 | 4 000 | 0,2 | **BEAS 012042-2RS** |
| | 42 | 25 | 16,8 | 24,5 | 0,915 | 6 700 | 0,2 | **BEAS 012042-2RZ** |
| **15** | 45 | 25 | 18 | 28 | 1,04 | 3 900 | 0,21 | **BEAS 015045-2RS** |
| | 45 | 25 | 18 | 28 | 1,04 | 6 500 | 0,21 | **BEAS 015045-2RZ** |
| **17** | 47 | 25 | 18 | 31 | 1,16 | 3 800 | 0,22 | **BEAS 017047-2RS** |
| | 47 | 25 | 19 | 31 | 1,16 | 6 300 | 0,22 | **BEAS 017047-2RZ** |
| **20** | 52 | 28 | 26 | 46,5 | 1,73 | 3 400 | 0,31 | **BEAS 020052-2RS** |
| | 52 | 28 | 26 | 46,5 | 1,73 | 6 000 | 0,31 | **BEAS 020052-2RZ** |
| | 52 | 28 | 26 | 46,5 | 1,73 | 6 000 | 0,31 | **BEAS 020052-2RZ/PE** |
| **25** | 57 | 28 | 27,6 | 55 | 2,04 | 3 400 | 0,34 | **BEAS 025057-2RS** |
| | 57 | 28 | 27,6 | 55 | 2,04 | 5 600 | 0,34 | **BEAS 025057-2RZ** |
| **30** | 62 | 28 | 29 | 64 | 2,36 | 3 200 | 0,39 | **BEAS 030062-2RS** |
| | 62 | 28 | 29 | 64 | 2,36 | 5 300 | 0,39 | **BEAS 030062-2RZ** |

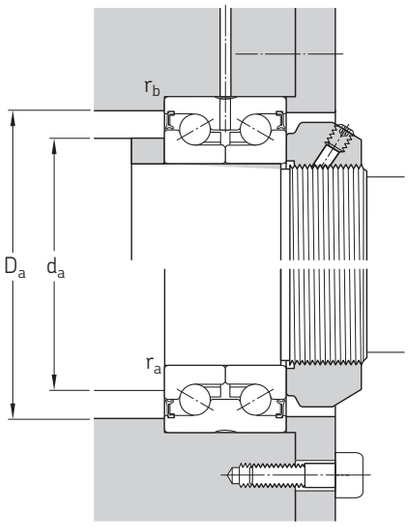


| Dimensions | | | | | | | | Abutment and fillet dimensions | | | |
|---|---|---|---|---|---|---|---|---|---|---|---|
| d | $d_1$ | $D_1$ | b | K | $r_{1,2}$ min. | $r_{3,4}$ min. | a | $d_a$ min. | $D_a$ max. | $r_a$ max. | $r_b$ max. |
| mm | | | | | | | | mm | | | |
| **8** | 19 | 26,5 | 3,1 | 1,2 | 0,3 | 0,6 | 43 | 12 | 26 | 0,3 | 0,6 |
| | 19 | 26,5 | 3,1 | 1,2 | 0,3 | 0,6 | 43 | 12 | 26 | 0,3 | 0,6 |
| **12** | 25 | 33,5 | 3,1 | 2,5 | 0,3 | 0,6 | 56 | 16 | 35 | 0,3 | 0,6 |
| | 25 | 33,5 | 3,1 | 2,5 | 0,3 | 0,6 | 56 | 16 | 35 | 0,3 | 0,6 |
| **15** | 28 | 36 | 3,1 | 2,5 | 0,3 | 0,6 | 61 | 20 | 35 | 0,3 | 0,6 |
| | 28 | 36 | 3,1 | 2,5 | 0,3 | 0,6 | 61 | 20 | 35 | 0,3 | 0,6 |
| **17** | 30 | 38 | 3,1 | 2,5 | 0,3 | 0,6 | 65 | 23 | 40 | 0,3 | 0,6 |
| | 30 | 38 | 3,1 | 2,5 | 0,3 | 0,6 | 65 | 23 | 40 | 0,3 | 0,6 |
| **20** | 34,5 | 44 | 3,1 | 3 | 0,3 | 0,6 | 74 | 26 | 45 | 0,3 | 0,6 |
| | 34,5 | 44 | 3,1 | 3 | 0,3 | 0,6 | 74 | 26 | 45 | 0,3 | 0,6 |
| | 34,5 | 44 | 3,1 | 3 | 0,3 | 0,6 | 74 | 26 | 45 | 0,3 | 0,6 |
| **25** | 40,5 | 49 | 3,1 | 3 | 0,3 | 0,6 | 84 | 32 | 50 | 0,3 | 0,6 |
| | 40,5 | 49 | 3,1 | 3 | 0,3 | 0,6 | 84 | 32 | 50 | 0,3 | 0,6 |
| **30** | 45,5 | 54 | 3,1 | 3 | 0,3 | 0,6 | 93 | 40 | 54 | 0,3 | 0,6 |
| | 45,5 | 54 | 3,1 | 3 | 0,3 | 0,6 | 93 | 40 | 54 | 0,3 | 0,6 |

# 6.3 Double direction angular contact thrust ball bearings for bolt mounting
d **12 – 60** mm

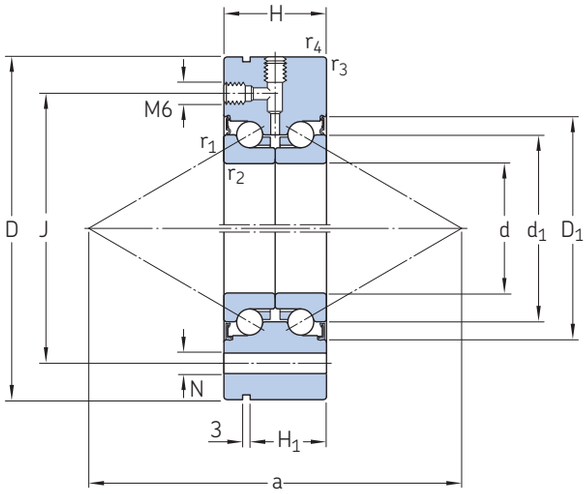


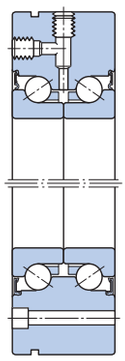

d = 60 mm

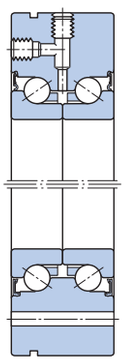

PE

| Principal dimensions | | | Basic load ratings | | Fatigue load limit | Attainable speed | Mass | Designation |
|---|---|---|---|---|---|---|---|---|
| | | | dynamic | static | | | | |
| d | D | H | C | $C_0$ | $P_u$ | | | |
| mm | | | kN | | kN | r/min | kg | – |
| **12** | 55 | 25 | 16,8 | 24,5 | 0,915 | 4 000 | 0,37 | **BEAM 012055-2RS** |
| | 55 | 25 | 16,8 | 24,5 | 0,915 | 6 700 | 0,37 | **BEAM 012055-2RZ** |
| **17** | 62 | 25 | 19 | 31 | 1,16 | 3 800 | 0,45 | **BEAM 017062-2RS** |
| | 62 | 25 | 19 | 31 | 1,16 | 3 800 | 0,45 | **BEAM 017062-2RS/PE** |
| | 62 | 25 | 19 | 31 | 1,16 | 6 300 | 0,45 | **BEAM 017062-2RZ** |
| | 62 | 25 | 19 | 31 | 1,16 | 6 300 | 0,45 | **BEAM 017062-2RZ/PE** |
| **20** | 68 | 28 | 26 | 46,5 | 1,73 | 3 400 | 0,61 | **BEAM 020068-2RS** |
| | 68 | 28 | 26 | 46,5 | 1,73 | 3 400 | 0,61 | **BEAM 020068-2RS/PE** |
| | 68 | 28 | 26 | 46,5 | 1,73 | 6 000 | 0,61 | **BEAM 020068-2RZ** |
| | 68 | 28 | 26 | 46,5 | 1,73 | 6 000 | 0,61 | **BEAM 020068-2RZ/PE** |
| **25** | 75 | 28 | 27,6 | 55 | 2,04 | 3 400 | 0,72 | **BEAM 025075-2RS** |
| | 75 | 28 | 27,6 | 55 | 2,04 | 3 400 | 0,72 | **BEAM 025075-2RS/PE** |
| | 75 | 28 | 27,6 | 55 | 2,04 | 5 600 | 0,72 | **BEAM 025075-2RZ** |
| | 75 | 28 | 27,6 | 55 | 2,04 | 5 600 | 0,72 | **BEAM 025075-2RZ/PE** |
| **30** | 80 | 28 | 29,1 | 64 | 2,36 | 2 600 | 0,78 | **BEAM 030080-2RS** |
| | 80 | 28 | 29,1 | 64 | 2,36 | 2 600 | 0,78 | **BEAM 030080-2RS/PE** |
| | 80 | 28 | 29,1 | 64 | 2,36 | 4 500 | 0,78 | **BEAM 030080-2RZ** |
| | 100 | 38 | 60 | 108 | 4 | 2 600 | 1,65 | **BEAM 030100-2RS** |
| | 100 | 38 | 60 | 108 | 4 | 4 300 | 1,65 | **BEAM 030100-2RZ** |
| **35** | 90 | 34 | 41 | 88 | 3,25 | 2 400 | 1,15 | **BEAM 035090-2RS** |
| | 90 | 34 | 41 | 88 | 3,25 | 4 000 | 1,15 | **BEAM 035090-2RZ** |
| **40** | 100 | 34 | 43,6 | 102 | 3,75 | 2 200 | 1,45 | **BEAM 040100-2RS** |
| | 100 | 34 | 43,6 | 102 | 3,75 | 3 800 | 1,45 | **BEAM 040100-2RZ** |
| | 115 | 46 | 71,5 | 150 | 5,5 | 1 800 | 2,2 | **BEAM 040115-2RS** |
| | 115 | 46 | 71,5 | 150 | 5,5 | 3 000 | 2,2 | **BEAM 040115-2RZ** |
| **50** | 115 | 34 | 46,8 | 127 | 4,65 | 2 000 | 1,85 | **BEAM 050115-2RS** |
| | 115 | 34 | 46,8 | 127 | 4,65 | 3 600 | 1,85 | **BEAM 050115-2RZ** |
| | 140 | 54 | 114 | 250 | 9,3 | 1 700 | 4,7 | **BEAM 050140-2RS** |
| | 140 | 54 | 114 | 250 | 9,3 | 2 800 | 4,7 | **BEAM 050140-2RZ** |
| **60** | 145 | 45 | 85 | 216 | 8 | 1 600 | 4,3 | **BEAM 060145-2RS** |
| | 145 | 45 | 85 | 216 | 8 | 2 600 | 4,3 | **BEAM 060145-2RZ** |

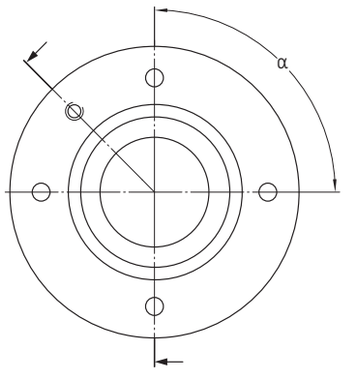


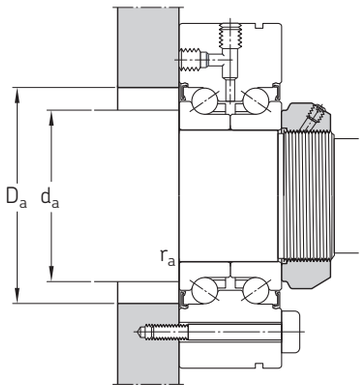


| Dimensions | | | | | | | Abutment and fillet dimensions | | | Holes for attachment bolts in accordance with DIN 912 | | | |
|---|---|---|---|---|---|---|---|---|---|---|---|---|---|
| d | $d_1$ | $D_1$ | $H_1$ | $r_{1,2}$ min. | $r_{3,4}$ min. | a | $d_a$ min. | $D_a$ max. | $r_a$ max. | Size | Dimensions J | N | Pitch nr. x α [°] |
| mm | | | | | | | mm | | | – | mm | | – |
| **12** | 25 | 33,5 | 17 | 0,3 | 0,6 | 56 | 16 | 33 | 0,6 | M6 | 42 | 6,8 | 3x120 |
| | 25 | 33,5 | 17 | 0,3 | 0,6 | 56 | 16 | 33 | 0,6 | M6 | 42 | 6,8 | 3x120 |
| **17** | 30 | 38 | 17 | 0,3 | 0,6 | 65 | 23 | 38 | 0,6 | M6 | 48 | 6,8 | 6x60 |
| | 30 | 38 | 17 | 0,3 | 0,6 | 65 | 23 | 38 | 0,6 | M6 | 48 | 6,8 | 6x60 |
| | 30 | 38 | 17 | 0,3 | 0,6 | 65 | 23 | 38 | 0,6 | M6 | 48 | 6,8 | 6x60 |
| | 30 | 38 | 17 | 0,3 | 0,6 | 65 | 23 | 38 | 0,6 | M6 | 48 | 6,8 | 6x60 |
| **20** | 34,5 | 44 | 19 | 0,3 | 0,6 | 74 | 25 | 44 | 0,6 | M6 | 53 | 6,8 | 8x45 |
| | 34,5 | 44 | 19 | 0,3 | 0,6 | 74 | 25 | 44 | 0,6 | M6 | 53 | 6,8 | 8x45 |
| | 34,5 | 44 | 19 | 0,3 | 0,6 | 74 | 25 | 44 | 0,6 | M6 | 53 | 6,8 | 8x45 |
| | 34,5 | 44 | 19 | 0,3 | 0,6 | 74 | 25 | 44 | 0,6 | M6 | 53 | 6,8 | 8x45 |
| **25** | 40,5 | 49 | 19 | 0,3 | 0,6 | 84 | 32 | 49 | 0,6 | M6 | 58 | 6,8 | 8x45 |
| | 40,5 | 49 | 19 | 0,3 | 0,6 | 84 | 32 | 49 | 0,6 | M6 | 58 | 6,8 | 8x45 |
| | 40,5 | 49 | 19 | 0,3 | 0,6 | 84 | 32 | 49 | 0,6 | M6 | 58 | 6,8 | 8x45 |
| | 40,5 | 49 | 19 | 0,3 | 0,6 | 84 | 32 | 49 | 0,6 | M6 | 58 | 6,8 | 8x45 |
| **30** | 45,5 | 54 | 19 | 0,3 | 0,6 | 93 | 40 | 54 | 0,6 | M6 | 63 | 6,8 | 12x30 |
| | 45,5 | 54 | 19 | 0,3 | 0,6 | 93 | 40 | 54 | 0,6 | M6 | 63 | 6,8 | 12x30 |
| | 45,5 | 54 | 19 | 0,3 | 0,6 | 93 | 40 | 54 | 0,6 | M6 | 63 | 6,8 | 12x30 |
| | 51 | 65 | 30 | 0,3 | 0,6 | 106 | 47 | 65 | 0,6 | M8 | 80 | 8,8 | 8x45 |
| | 51 | 65 | 30 | 0,3 | 0,6 | 106 | 47 | 65 | 0,6 | M8 | 80 | 8,8 | 8x45 |
| **35** | 52 | 63 | 25 | 0,3 | 0,6 | 107 | 45 | 63 | 0,6 | M8 | 75 | 8,8 | 8x45 |
| | 52 | 63 | 25 | 0,3 | 0,6 | 107 | 45 | 63 | 0,6 | M8 | 75 | 8,8 | 8x45 |
| **40** | 58 | 68 | 25 | 0,3 | 0,6 | 117 | 50 | 68 | 0,6 | M8 | 80 | 8,8 | 8x45 |
| | 58 | 68 | 25 | 0,3 | 0,6 | 117 | 50 | 68 | 0,6 | M8 | 80 | 8,8 | 8x45 |
| | 65 | 80 | 36 | 0,6 | 0,6 | 134 | 56 | 80 | 0,6 | M8 | 94 | 8,8 | 12x30 |
| | 65 | 80 | 36 | 0,6 | 0,6 | 134 | 56 | 80 | 0,6 | M8 | 94 | 8,8 | 12x30 |
| **50** | 72 | 82 | 25 | 0,3 | 0,6 | 141 | 63 | 82 | 0,6 | M8 | 94 | 8,8 | 12x30 |
| | 72 | 82 | 25 | 0,3 | 0,6 | 141 | 63 | 82 | 0,6 | M8 | 94 | 8,8 | 12x30 |
| | 80 | 98 | 45 | 0,6 | 0,6 | 166 | 63 | 98 | 0,6 | M10 | 113 | 11 | 12x30 |
| | 80 | 98 | 45 | 0,6 | 0,6 | 166 | 63 | 98 | 0,6 | M10 | 113 | 11 | 12x30 |
| **60** | 85 | 100 | 35 | 0,6 | 0,6 | 168 | 82 | 100 | 0,6 | M8 | 120 | 8,8 | 8x45 |
| | 85 | 100 | 35 | 0,6 | 0,6 | 168 | 82 | 100 | 0,6 | M8 | 120 | 8,8 | 8x45 |

# 6.4 Cartridge units with a flanged housing

d **20 – 60** mm

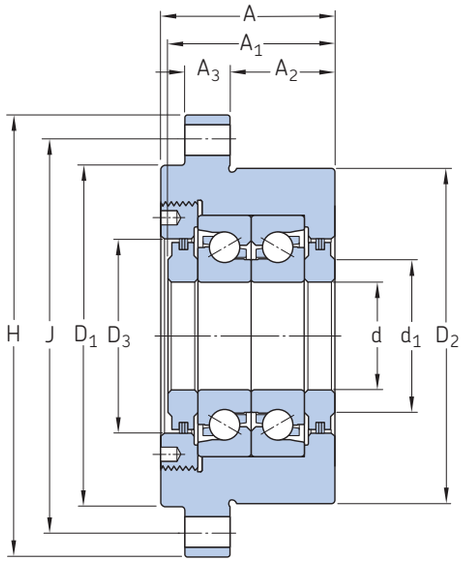


FBSA 2 .. /DB

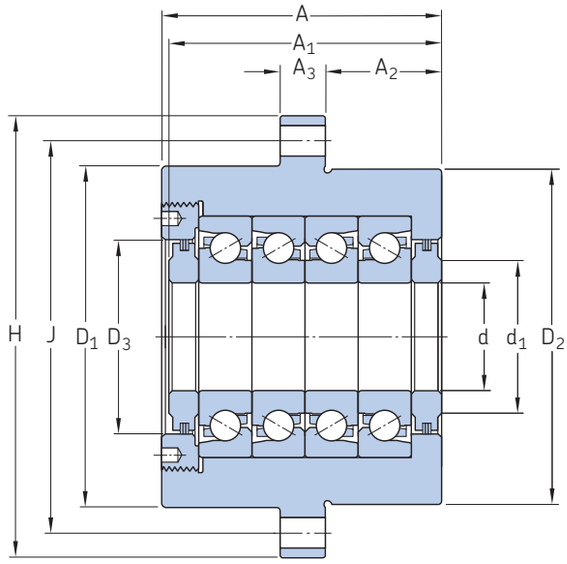


FBSA 2 .. /QBC

| Principal dimensions | | | Basic load ratings | | Fatigue load limit | Attainable speeds Preload class | | Mass | Designation |
|---|---|---|---|---|---|---|---|---|---|
| | | | dynamic | static | | | | | |
| d | H | A | C | $C_0$ | $P_u$ | A | B | | |
| mm | | | kN | | kN | r/min | | kg | – |
| **20** | 90 | 47 | 22 | 49 | 1,8 | 7 600 | 3 800 | 1,1 | **FBSA 204/DB** |
| | 90 | 47 | 22 | 49 | 1,8 | 7 600 | 3 800 | 1,1 | **FBSA 204/DF** |
| | 90 | 77 | 35,9 | 98 | 3,6 | 4 750 | 2 375 | 1,7 | **FBSA 204/QBC** |
| | 90 | 77 | 35,9 | 98 | 3,6 | 4 750 | 2 375 | 1,7 | **FBSA 204/QFC** |
| **25** | 120 | 52 | 22,4 | 52 | 1,93 | 7 200 | 3 600 | 2,3 | **FBSA 205/DB** |
| | 120 | 52 | 22,4 | 52 | 1,93 | 7 200 | 3 600 | 2,3 | **FBSA 205/DF** |
| | 120 | 82 | 36,5 | 104 | 3,86 | 4 500 | 2 250 | 3,5 | **FBSA 205/QBC** |
| | 120 | 82 | 36,5 | 104 | 3,86 | 4 500 | 2 250 | 3,5 | **FBSA 205/QFC** |
| **30** | 120 | 52 | 28,5 | 71 | 2,65 | 6 400 | 3 200 | 2,5 | **FBSA 206/DB** |
| | 120 | 52 | 28,5 | 71 | 2,65 | 6 400 | 3 200 | 2,5 | **FBSA 206/DF** |
| | 120 | 84 | 46,5 | 142 | 5,3 | 4 000 | 2 000 | 3,5 | **FBSA 206/QBC** |
| | 120 | 84 | 46,5 | 142 | 5,3 | 4 000 | 2 000 | 3,5 | **FBSA 206/QFC** |
| | 120 | 86 | 46,5 | 142 | 5,3 | 4 000 | 2 000 | 3,7 | **FBSA 206 A/QBC** |
| | 120 | 86 | 46,5 | 142 | 5,3 | 4 000 | 2 000 | 3,7 | **FBSA 206 A/QFC** |
| **35** | 130 | 52 | 36,5 | 98 | 3,65 | 5 600 | 2 800 | 3,2 | **FBSA 207/DB** |
| | 130 | 52 | 36,5 | 98 | 3,65 | 5 600 | 2 800 | 3,2 | **FBSA 207/DF** |
| | 130 | 86 | 59,5 | 196 | 7,3 | 3 500 | 1 750 | 4,6 | **FBSA 207/QBC** |
| | 130 | 86 | 59,5 | 196 | 7,3 | 3 500 | 1 750 | 4,6 | **FBSA 207/QFC** |
| **40** | 165 | 66 | 42,5 | 112 | 4,15 | 5 040 | 2 520 | 6,1 | **FBSA 208/DB** |
| | 165 | 66 | 42,5 | 112 | 4,15 | 5 040 | 2 520 | 6,1 | **FBSA 208/DF** |
| | 165 | 106 | 69,3 | 224 | 8,3 | 3 150 | 1 575 | 9,7 | **FBSA 208/QBC** |
| | 165 | 106 | 69,3 | 224 | 8,3 | 3 150 | 1 575 | 9,7 | **FBSA 208/QFC** |
| | 165 | 106 | 69,3 | 224 | 8,3 | 3 150 | 1 575 | 10 | **FBSA 208 A/QBC** |
| | 165 | 106 | 69,3 | 224 | 8,3 | 3 150 | 1 575 | 10 | **FBSA 208 A/QFC** |
| **45** | 165 | 66 | 45 | 134 | 4,9 | 5 040 | 2 520 | 5,9 | **FBSA 209/DB** |
| | 165 | 66 | 45 | 134 | 4,9 | 5 040 | 2 520 | 5,9 | **FBSA 209/DF** |
| | 165 | 106 | 73,4 | 268 | 9,8 | 3 150 | 1 575 | 9,4 | **FBSA 209/QBC** |
| | 165 | 106 | 73,4 | 268 | 9,8 | 3 150 | 1 575 | 9,4 | **FBSA 209/QFC** |
| **50** | 165 | 66 | 46,5 | 146 | 5,4 | 4 800 | 2 400 | 5,7 | **FBSA 210/DB** |
| | 165 | 66 | 46,5 | 146 | 5,4 | 4 800 | 2 400 | 5,7 | **FBSA 210/DF** |
| | 165 | 106 | 75,8 | 292 | 10,8 | 3 000 | 1 500 | 9,1 | **FBSA 210/QBC** |
| | 165 | 106 | 75,8 | 292 | 10,8 | 3 000 | 1 500 | 9,1 | **FBSA 210/QFC** |
| | 165 | 106 | 75,8 | 292 | 10,8 | 3 000 | 1 500 | 9,3 | **FBSA 210 A/QBC** |
| | 165 | 106 | 75,8 | 292 | 10,8 | 3 000 | 1 500 | 9,3 | **FBSA 210 A/QFC** |
| **60** | 185 | 114 | 113 | 432 | 16 | 2 500 | 1 250 | 12,5 | **FBSA 212 A/QBC** |
| | 185 | 114 | 113 | 432 | 16 | 2 500 | 1 250 | 12,5 | **FBSA 212 A/QFC** |

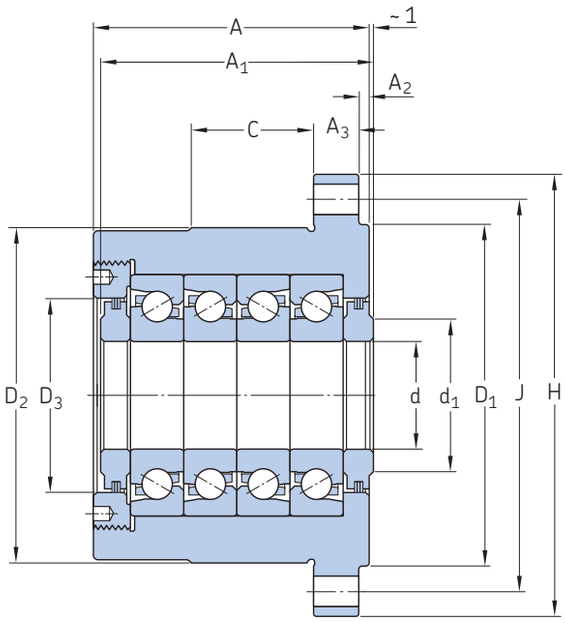


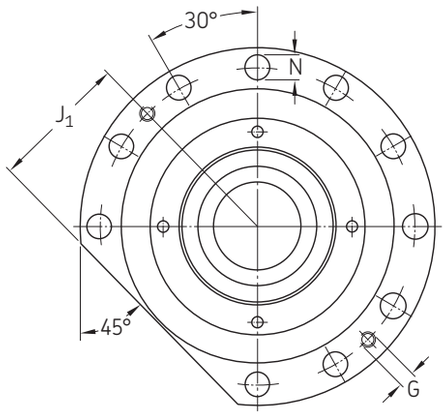


FBSA 2 .. A/QBC

| Dimensions | | | | | | | | | Holes for attachment bolts | | | |
|---|---|---|---|---|---|---|---|---|---|---|---|---|
| d | $A_1$ | $A_2$ | $A_3$ | C | $d_1$ | $D_1$ | $D_2$ | $D_3$ | J | $J_1$ | N | G |
| mm | | | | | | | | | mm | | | |
| **20** | 44,26 | 32 | 13 | – | 26 | 64 | 60 | 36 | 76 | 32 | 6,6 | – |
| | 43,24 | 32 | 13 | – | 26 | 64 | 60 | 36 | 76 | 32 | 6,6 | – |
| | 74,26 | 32 | 13 | – | 26 | 64 | 60 | 36 | 76 | 32 | 6,6 | – |
| | 72,74 | 32 | 13 | – | 26 | 64 | 60 | 36 | 76 | 32 | 6,6 | – |
| **25** | 50,26 | 32 | 15 | – | 34 | 88 | 80 | 36 | 102 | 44 | 9,2 | – |
| | 49,24 | 32 | 15 | – | 34 | 88 | 80 | 36 | 102 | 44 | 9,2 | – |
| | 80,26 | 32 | 15 | – | 34 | 88 | 80 | 40 | 102 | 44 | 9,2 | – |
| | 78,74 | 32 | 15 | – | 34 | 88 | 80 | 40 | 102 | 44 | 9,2 | – |
| **30** | 50,26 | 32 | 15 | – | 41 | 88 | 80 | 50 | 102 | 44 | 9,2 | – |
| | 49,24 | 32 | 15 | – | 41 | 88 | 80 | 50 | 102 | 44 | 9,2 | – |
| | 82,26 | 32 | 15 | – | 41 | 88 | 80 | 50 | 102 | 44 | 9,2 | – |
| | 80,74 | 32 | 15 | – | 41 | 88 | 80 | 50 | 102 | 44 | 9,2 | – |
| | 86,26 | 3,5 | 15 | 35 | 41 | 88 | 88 | 50 | 102 | 45 | 9,2 | M8x1,25 |
| | 86,26 | 3,5 | 15 | 35 | 41 | 88 | 88 | 50 | 102 | 45 | 9,2 | M8x1,25 |
| **35** | 50,26 | 32 | 15 | – | 46 | 98 | 90 | 60 | 113 | 49 | 9,2 | – |
| | 49,24 | 32 | 15 | – | 46 | 98 | 90 | 60 | 113 | 49 | 9,2 | – |
| | 84,26 | 32 | 15 | – | 46 | 98 | 90 | 60 | 113 | 49 | 9,2 | – |
| | 82,74 | 32 | 15 | – | 46 | 98 | 90 | 60 | 113 | 49 | 9,2 | – |
| **40** | 64,26 | 43,5 | 17 | – | 55 | 128 | 124 | 66 | 146 | 64 | 11,4 | – |
| | 63,24 | 43,5 | 17 | – | 55 | 128 | 124 | 66 | 146 | 64 | 11,4 | – |
| | 104,26 | 43,5 | 17 | – | 55 | 128 | 124 | 66 | 146 | 64 | 11,4 | – |
| | 102,74 | 43,5 | 17 | – | 55 | 128 | 124 | 66 | 146 | 64 | 11,4 | – |
| | 106,26 | 4 | 24 | 35 | 55 | 128 | 128 | 66 | 146 | 65,5 | 11,4 | M10x1,5 |
| | 106,26 | 4 | 24 | 35 | 55 | 128 | 128 | 66 | 146 | 65,5 | 11,4 | M10x1,5 |
| **45** | 64,26 | 43,5 | 17 | – | 66 | 128 | 124 | 76 | 146 | 64 | 11,4 | – |
| | 63,24 | 43,5 | 17 | – | 66 | 128 | 124 | 76 | 146 | 64 | 11,4 | – |
| | 104,26 | 43,5 | 17 | – | 66 | 128 | 124 | 76 | 146 | 64 | 11,4 | – |
| | 102,74 | 43,5 | 17 | – | 66 | 128 | 124 | 76 | 146 | 64 | 11,4 | – |
| **50** | 64,26 | 43,5 | 17 | – | 66 | 128 | 124 | 76 | 146 | 64 | 11,4 | – |
| | 63,24 | 43,5 | 17 | – | 66 | 128 | 124 | 76 | 146 | 64 | 11,4 | – |
| | 104,26 | 43,5 | 17 | – | 66 | 128 | 124 | 76 | 146 | 64 | 11,4 | – |
| | 102,74 | 43,5 | 17 | – | 66 | 128 | 124 | 76 | 146 | 64 | 11,4 | – |
| | 106,26 | 4 | 24 | 35 | 66 | 128 | 128 | 76 | 146 | 65,5 | 11,4 | M10x1,5 |
| | 106,26 | 4 | 24 | 35 | 66 | 128 | 128 | 76 | 146 | 65,5 | 11,4 | M10x1,5 |
| **60** | 114,26 | 20,5 | 25 | 40 | 80 | 145 | 145 | 92 | 165 | 74,5 | 11,4 | M10x1,5 |
| | 114,26 | 20,5 | 25 | 40 | 80 | 145 | 145 | 92 | 165 | 74,5 | 11,4 | M10x1,5 |